KAISAI

ARCTIC POWER

WE CARE ABOUT AIR

TECHNICAL MANUAL

EN

ARCTIC POWER HEAT PUMP

KAISAI

HEAT PUMP
ARCTIC POWER

KCHP-SU65-RN8L KCHP-SU110-RN8L

Technical Manual

Thank you very much for purchasing our product,
Before using your unit , please read this manual carefully and keep it for future reference.

CONTENTS

Part 1 General Information 3

Part 2 Engineering Data 11

Part 3 Installation and Field Settings 25

Part 1

General Information

1 SYSTEM INTRODUCTION 4

2 PRODUCT LINEUP 9

3 NOMENCLATURE 9

4 SYSTEM DESIGN AND UNIT SELECTION 10

1 System introduction

1.1 System Schematic

Aqua thermal Super is an integrated air-to-water space heating and space cooling heat pump system. The outdoor heat pump system extracts heat from the outdoor air and transfers this heat through refrigerant piping to the plate heat exchanger in the hydronic system. The heated water in the hydronic system circulates to low temperature heat emitters (floor heating loops or low temperature radiators) to provide space heating. The 4-way valve in the outdoor unit can reverse the refrigerant cycle so that the hydronic system can provide chilled water for cooling using fan coil units.

The heating capacity of heat pumps decreases with the decrease of ambient temperature. Aqua thermal Super is reserved an auxiliary electric heater control port to provide additional heating capacity for use during extremely cold weather when the heat pump capacity is insufficient. The auxiliary electric heater also serves as a backup in case of heat pump malfunction and for anti-freeze protection of the outside water piping in winter.

1.2 Typical Applications

1.2.1 Air Conditioning mode (Installation of variable frequency pump in the project)

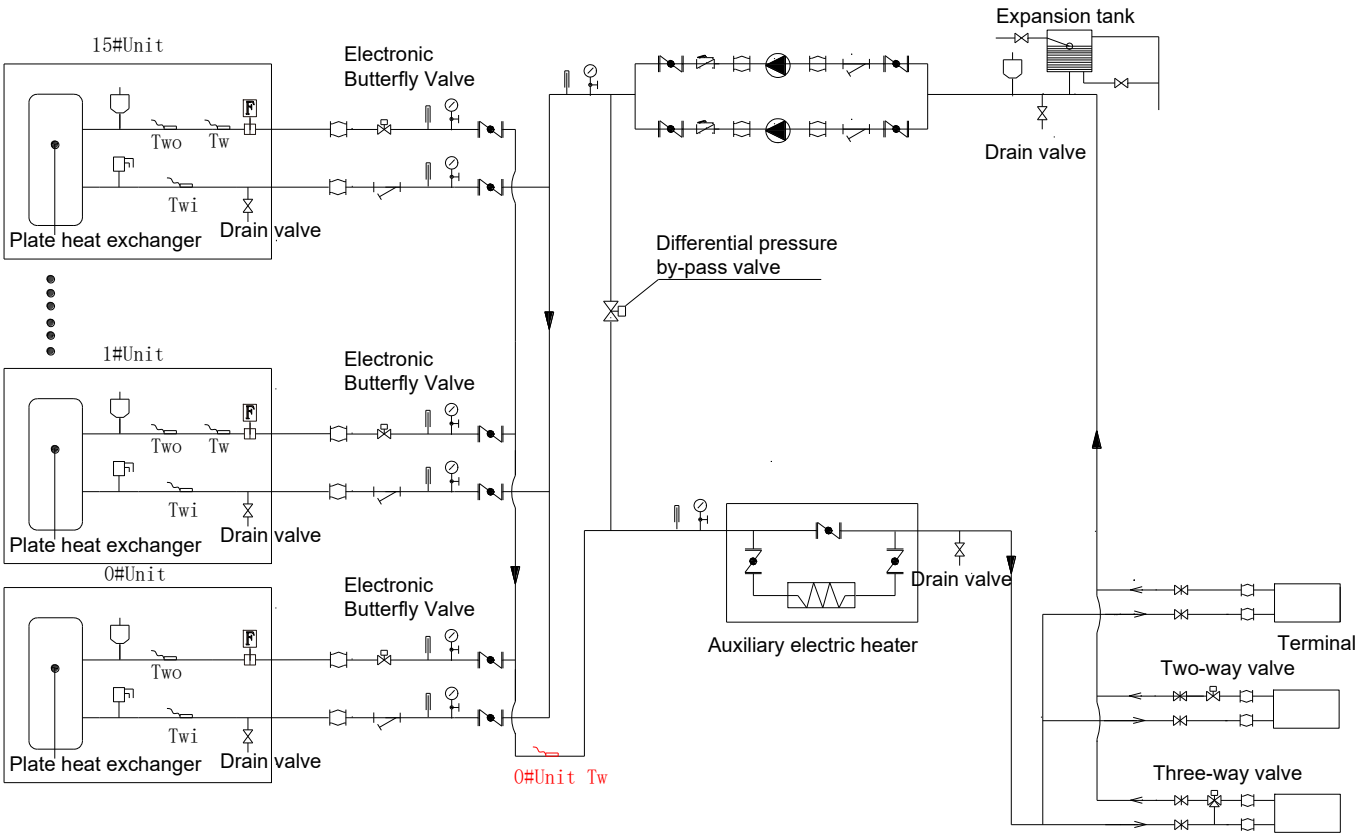

Symbol explanation				
Drain vavle	Water pressure instrument	Water flow switch	Gate valve	Differential pressure by-pass valve
Y-filter	Thermometer	Pump	Check valve	Atmospheric exhaust valve
Expansion tank	Safety valve	Soft joint	Solenoid three-way valve	

Note:

1. The ratio of the two - way valves on the terminal shall not exceed 50 percent.

2. The main outlet water temperature sensing (Tw) head of the unit at address 0 needs to be placed on the main outlet pipe.

3. The hot water tank and the hot water exchange pump of the unit use the CN125 (220V) port control switch on the slave board of the 0 # unit, pump output is controlled through CN108 (0-10V).

1.2.2 Air Conditioning mode (unit with variable frequency pump)

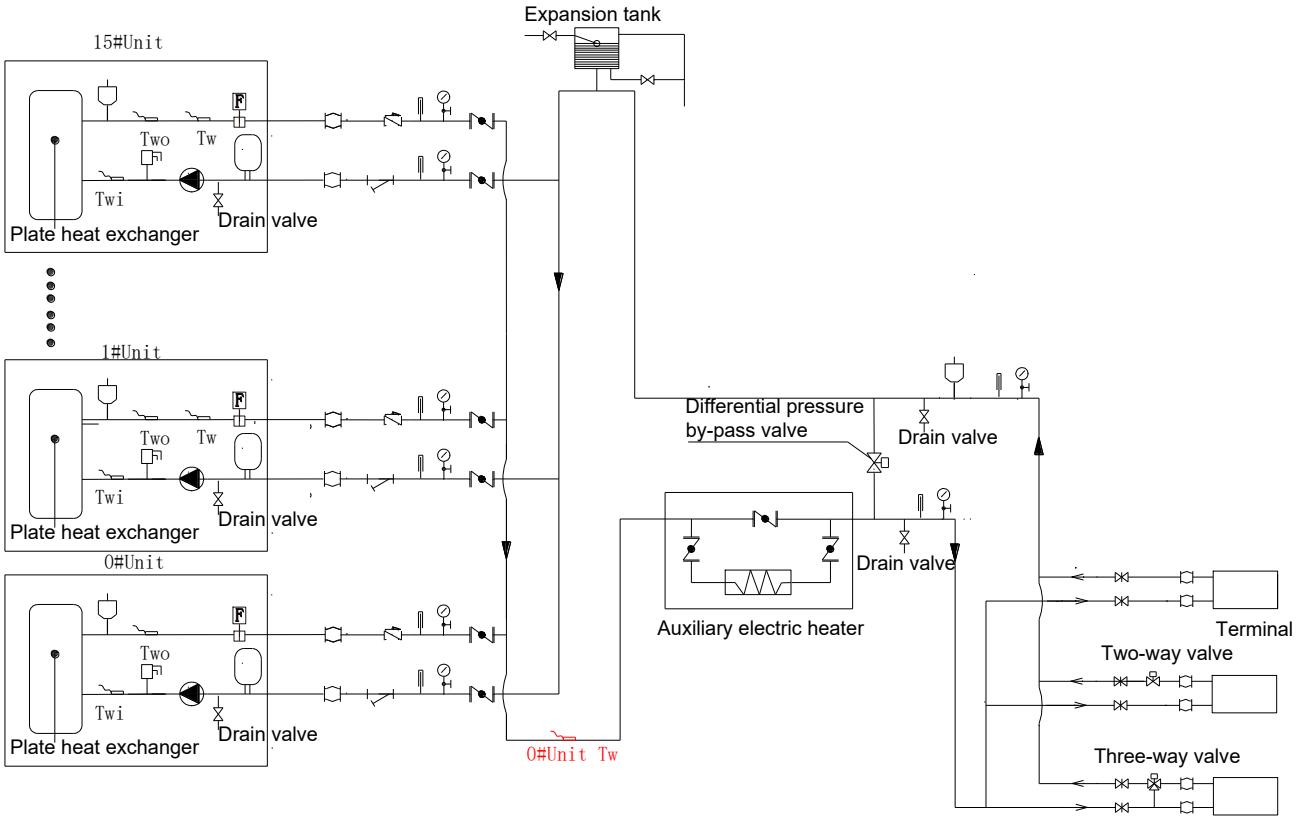

Symbol explanation				
Drain vavle	Water pressure instrument	Water flow switch	Gate valve	Differential pressure by-pass valve
Y-filter	Thermometer	Pump	Check valve	Atmospheric exhaust valve
Expansion tank	Safety valve	Soft joint	Solenoid three-way valve	

Note:

1. The ratio of the two - way valves on the terminal shall not exceed 50 percent.

2. The main outlet water temperature sensing (Tw) head of the unit at address 0 needs to be placed on the main outlet pipe.

3. The hot water tank and the hot water exchange pump of the unit use the CN125 (220V) port control switch on the slave board of the 0 # unit, pump output is controlled through CN108 (0-10V).

1.2.3 Air conditioning and hot water mode (Installation of variable frequency pump in the project)

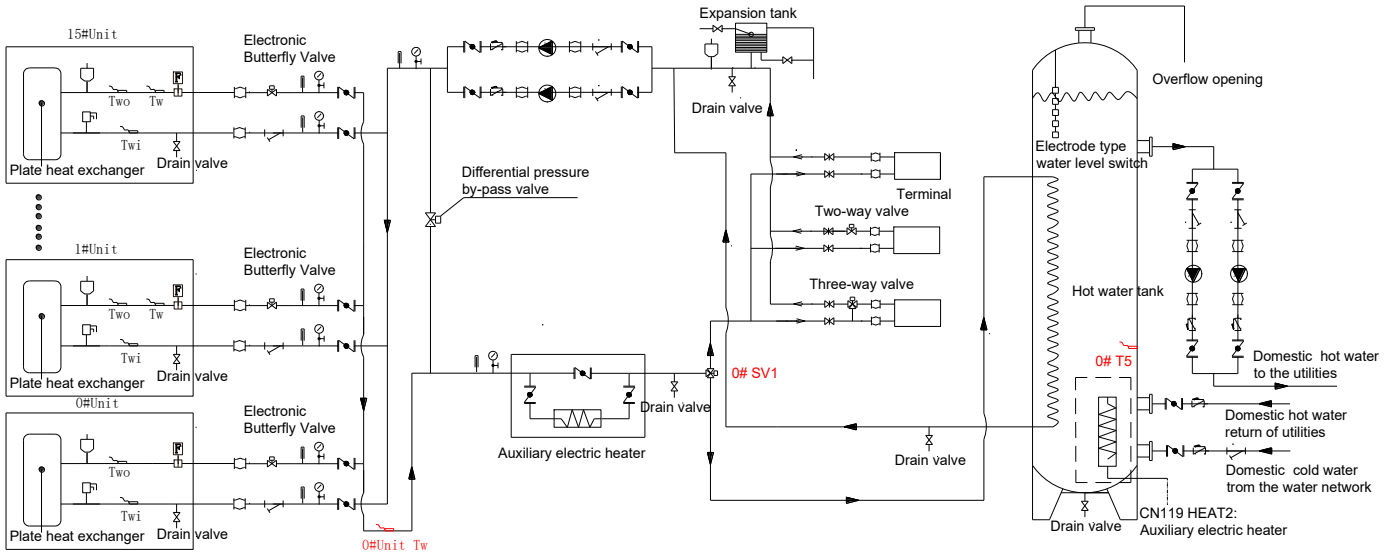

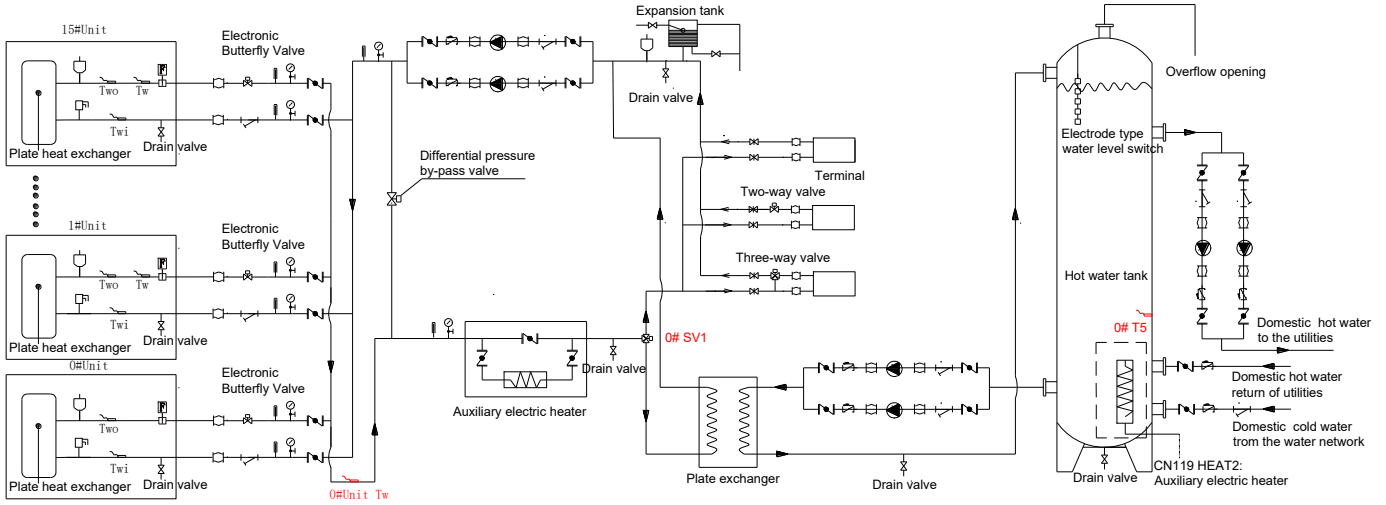

Symbol explanation				
Drain vavle	Water pressure instrument	Water flow switch	Gate valve	Differential pressure by-pass valve
Y-filter	Thermometer	Pump	Check valve	Atmospheric exhaust valve
Expansion tank	Safety valve	Soft joint	Solenoid three-way valve	

Note:

1. The ratio of the two - way valves on the terminal shall not exceed 50 percent.

2. The main outlet water temperature sensing (Tw) head of the unit at address 0 needs to be placed on the main outlet pipe.

3. The hot water tank and the hot water exchange pump of the unit use the CN125（220V） port control switch on the slave board of the 0 # unit, pump output is controlled through CN108（0-10V).

1.2.4 Air conditioning and hot water mode (unit with variable frequency pump)

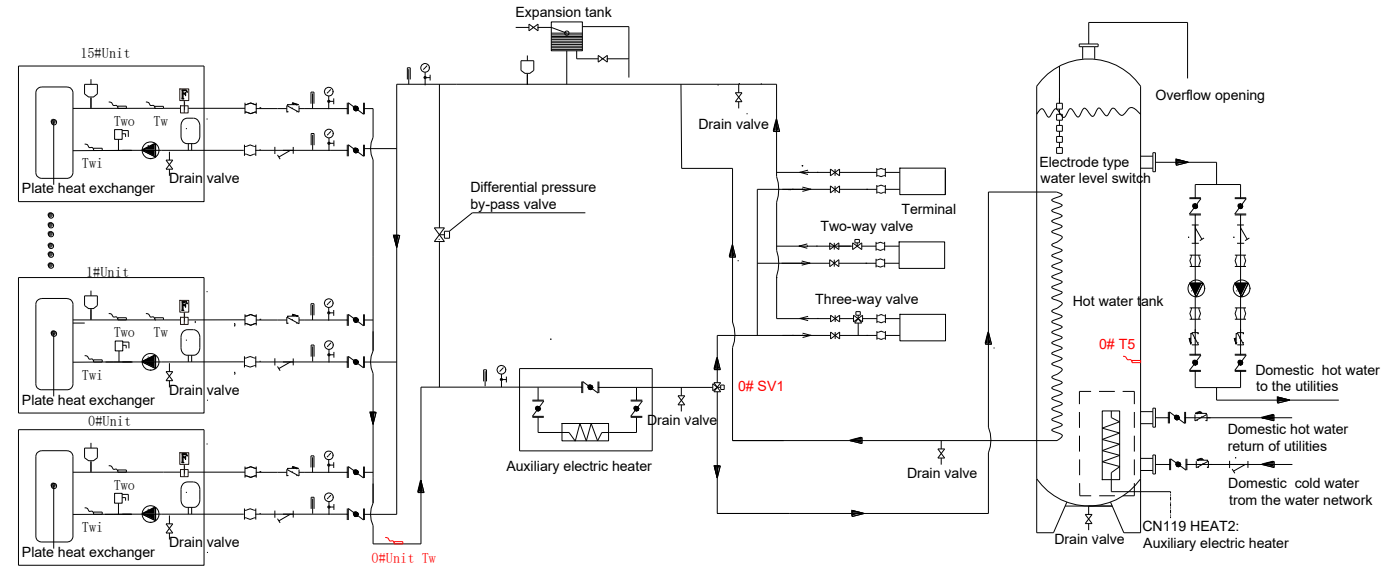

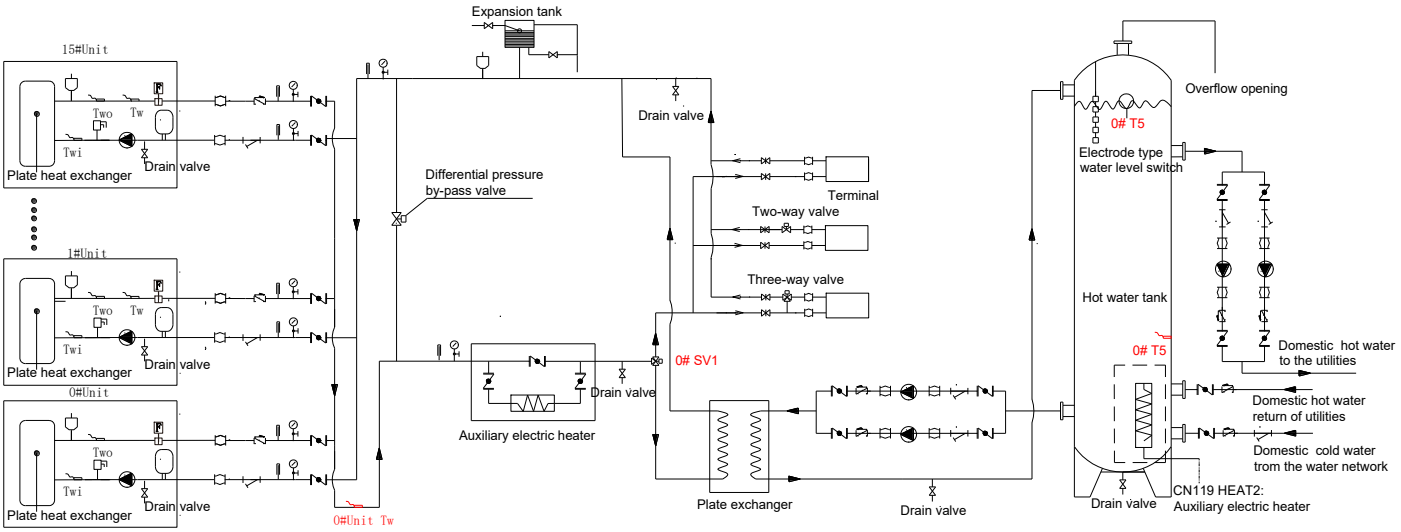

Symbol explanation				
Drain vavle	Water pressure instrument	Water flow switch	Gate valve	Differential pressure by-pass valve
Y-filter	Thermometer	Pump	Check valve	Atmospheric exhaust valve
Expansion tank	Safety valve	Soft joint	Solenoid three-way valve	

Note:

1. The ratio of the two - way valves on the terminal shall not exceed 50 percent.

2. The main outlet water temperature sensing (Tw) head of the unit at address 0 needs to be placed on the main outlet pipe.

3. The hot water tank and the hot water exchange pump of the unit use the CN125（220V） port control switch on the slave board of the 0 # unit, pump output is controlled through CN108（0-10V).

1.2.5 Cooling and hot water mode are operated simultaneously (unit with variable frequency pump)

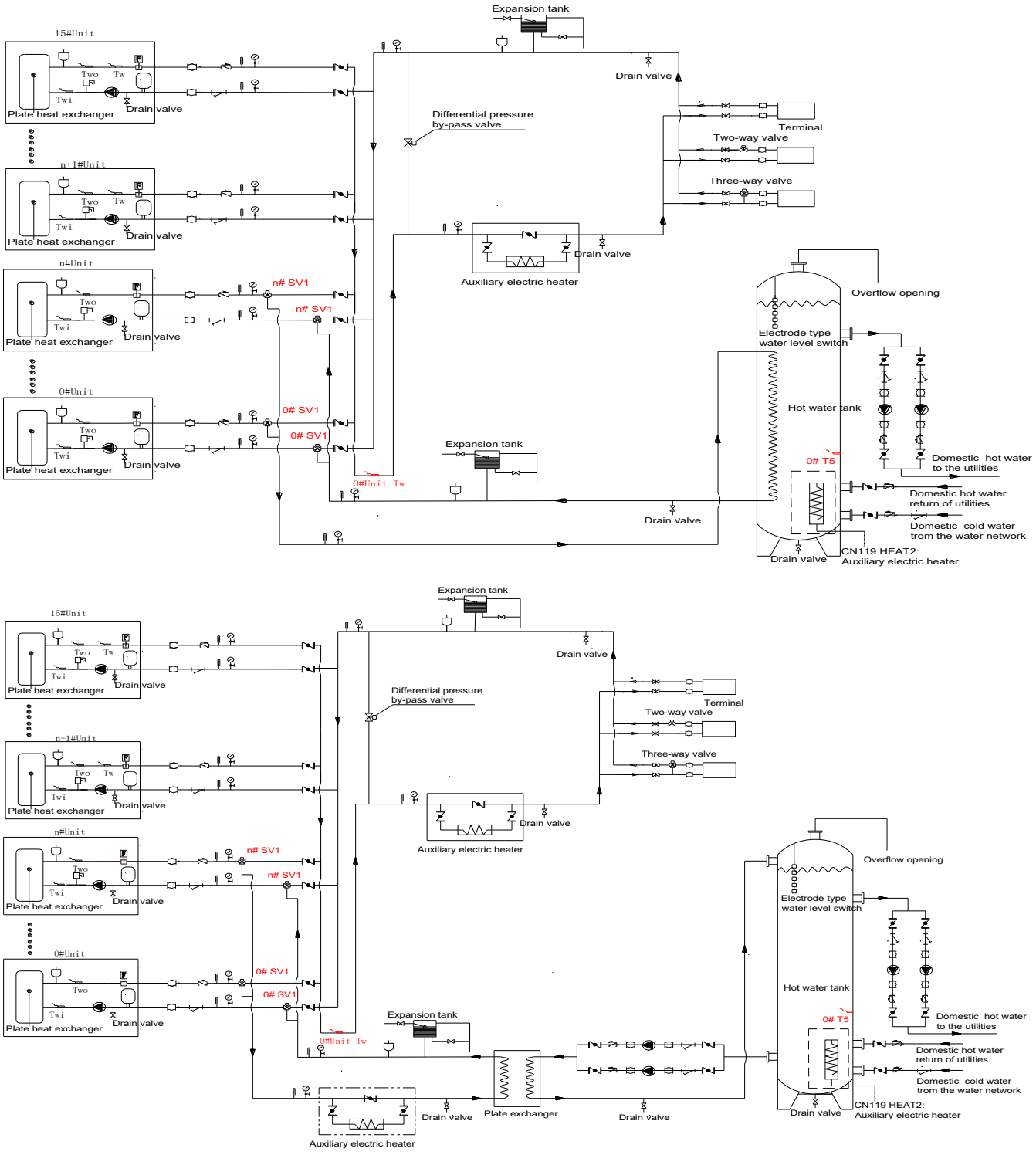

Symbol explanation				
Drain vavle	Water pressure instrument	Water flow switch	Gate valve	Differential pressure by-pass valve
Y-filter	Thermometer	Pump	Check valve	Atmospheric exhaust valve
Expansion tank	Safety valve	Soft joint	Solenoid three-way valve	

Note:

1. The ratio of the two - way valves on the terminal shall not exceed 50 percent.

2. The main outlet water temperature sensing (Tw) head of the unit at address 0 needs to be placed on the main outlet pipe.

3. The hot water tank and the hot water exchange pump of the unit use the CN125（220V） port control switch on the slave board of the 0 # unit, pump output is controlled through CN108（0-10V).

2 Product lineup

Model	KCHP-SU65-RN8L	KCHP-SU110-RN8L
Power supply	380-415V/3 ph/50Hz	380-415V/3 ph/50Hz
Appearance		

3 Nomenclature

K	C	H	P	-	S	U	65	-	R	N8	L
1	2	2	2		3	4	5		6	7	8

Legend		
No.	**Code**	**Remarks**
1	K	Brand: KAISAI
2	CHP	High power heat pump
3	S	Series code
4	U	Special function code U: DC inverter compressor
5	65	Rated heating capacity (kW) 65: 65 kW /h; 110: 110 kW /h;
6	R	Power supply: 380-415V/3 ph/50Hz
7	N8	Refrigerant type N8: R32
8	L	L: Low temperature refrigeration function Omitted: Without low temperature refrigeration function

4 System Design and Unit Selection

4.1 Selection Procedure

Step 1: Total heat load calculation

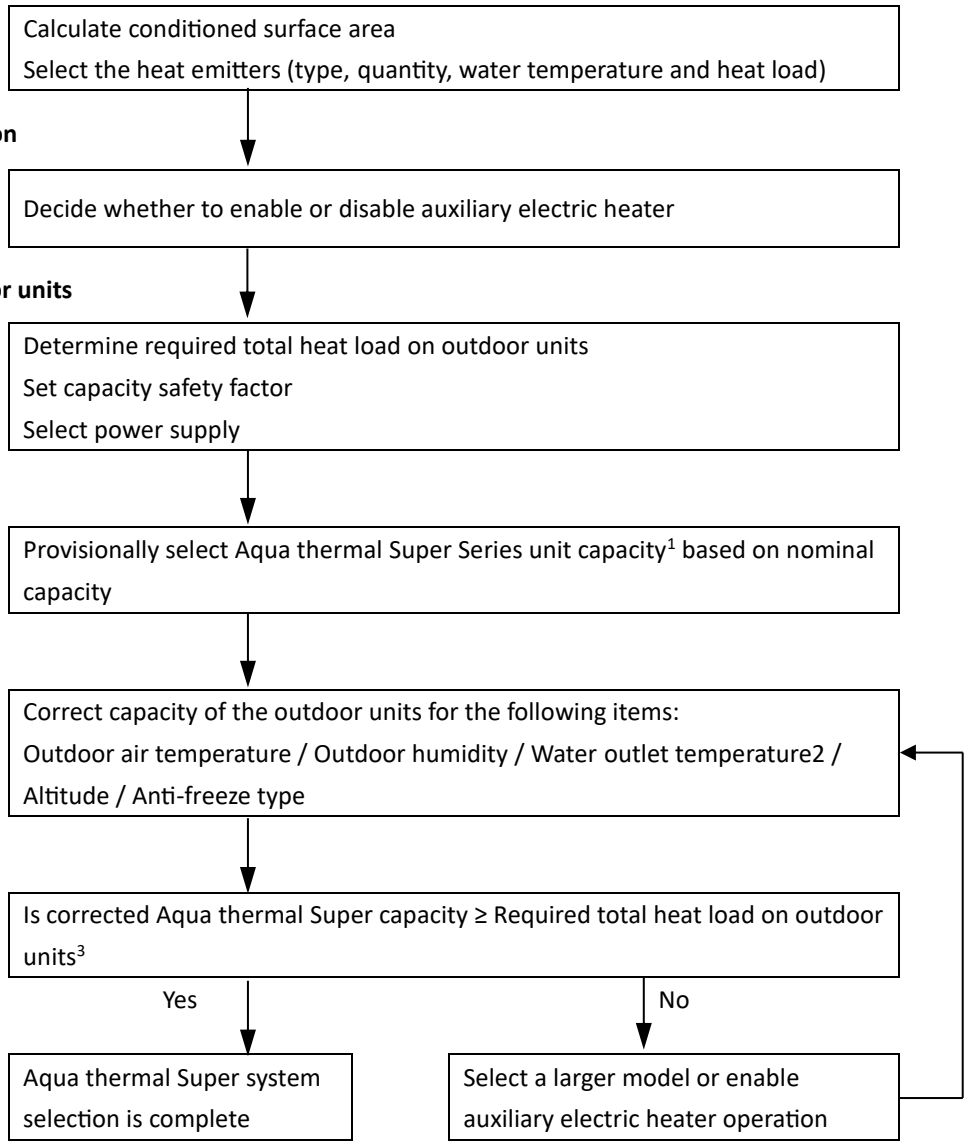

Notes:

1. Up to 16 units can be connected together, giving a system cooling/heating capacity range from 65kW to 1760kW.
2. If the required water temperatures of the heat emitters are not all the same, the Aqua thermal Super's outlet water temperature setting should be set at the highest of the heat emitter required water temperatures. If the water outlet design temperature falls between two temperatures listed in the outdoor unit's capacity table, calculate the corrected capacity by interpolation.
3. Select Aqua thermal Super which satisfies both total heating and cooling load requirements.

4.2 Modular Chiller Leaving Water Temperature (LWT) Selection

The recommended design LTW ranges for different types of heat emitter are:

- For floor heating: 35 to 45°C
- For fan coil units: 40 to 45°C
- For low temperature radiators: 40 to 50°C

4.3 Optimizing System Design

To get the most comfort with the lowest energy consumption with Aqua thermal Super, it is important to take account of the following considerations:

- Choose heat emitters that allow the heat pump system to operate at as low a hot water temperature as possible whilst still providing sufficient heating.

Part 2

Engineering Data

1 SPECIFICATIONS 12

2 ELECTRICAL CHARACTERISTICS 13

3 DIMENSIONS AND CENTER OF GRAVITY 14

4 CAPACITY TABLES 15

5 PERFORMANCE ADJUSTMENT FACTORS 19

6 HYDRONIC PERFORMANCE 21

7 OCTAVE BAND LEVELS 22

1 Specifications

Model			KCHP-SU65-RN8L	KCHP-SU110-RN8L
Power supply		V/Ph/Hz	380~415/3/50	380~415/3/50
Cooling(A35W7)	Capacity	kW	57	100
	Input	kW	19.00	32.78
	EER		3.00	3.05
Cooling(A35W18)	Capacity	kW	76	128
	Input	kW	20.27	33.70
	EER		3.75	3.80
SEER			5.00	4.80
Heating(A7W65)	Capacity	kW	60	100
	Input	kW	26.10	42.90
	COP		2.30	2.33
Heating(A7W55)	Capacity	kW	64	106
	Input	kW	21.33	35.30
	COP		3.00	3.00
Heating(A7W45)	Capacity	kW	65	110
	Input	kW	18.30	29.90
	COP		3.55	3.68
Heating(A7W35)	Capacity	kW	64	112
	Input	kW	15.24	27.00
	COP		4.20	4.15
SCOP(55)average			3.40	3.25
SCOP(35)average			4.50	4.25
Fan	Type		DC motor	DC motor
	Quantity		2	2
	Air flow rate	m^3/h	22000	32500
Air side heat exchanger	Type		Fin coil mode	Fin coil mode
	Row		2	2
	thickness	mm	0.095	0.095
	pipe diameter	mm	7	7
Water side heat exchanger	Type		Plate heat exchanger	Plate heat exchanger
	Water pressure drop	kPa	44	39
	Volume	L	5.17	11.1
	Rated water flow(cooling)	m^3/h	9.8	17.2
	Rated water flow(heating)	m^3/h	11.2	18.9
	Water flow range	m^3/h	3~14	5~26
Refrigerant system	Type		R32	R32
	Charge	kg	9	15.5
	Throttle type		EXV	EXV
Water pump (Customized)	Power supply	V/Ph/Hz	380V ±10% 3P 50/60	380V ±10% 3P 50/60
	Rated power	KW	1.78	3.0
	Rated current	A	3.25	5.8
	Rated pump head	m	27.1	19
	Rated speed	r/min	3480	3110

Expansion tank (Customized)	Volume	L	12	22
	Precharge pressure	Mpa	0.15	0.15
	Test pressure	Mpa	1	1
Sound power level[1] (A7W45)		dB(A)	80	80
Sound pressure level(1m) [2] (A7W45)		dB(A)	64	64
Silent mode sound power level(A7W45)		dB(A)	77	75
Super Silent mode sound power level(A7W45)		dB(A)	74	72
Net dimensions(W×H×D)		mm	2000X1770X960	2220×2300×1135
Packed dimensions (W×H×D)		mm	2085X1890X1030	2250×2445×1180
Net / Gross weight		kg	440 / 455	670 / 690
Water pipe connection		mm	DN50	DN65
Ambient temperature range	Cooling	℃	-15 to 48	-15 to 48
	Heating	℃	-25 to 43	-25 to 43
	DHW	℃	-25 to 43	-25 to 43
Water outlet temperature range	Cooling[3]	℃	0 to 20	0 to 20
	Heating	℃	25 to 65	25 to 65
	DHW(Heat pump)	℃	30 to 62	30 to 62
	DHW(Heat pump + Electric heater[4])	℃	30 to 70	30 to 70

Notes:

1. Test standard: EN12102-1. Outdoor ambient temperature 35°C DB. EWT 12°C, LWT 7°C

2. Outdoor ambient temperature 35°C DB. EWT 12°C, LWT 7°C

Sound pressure level is the test average measured in a semi-anechoic chamber. The test position is 1m right in front of the unit for four sides and (1+H)/2m (where H is the height of the unit) above the floor. During in-situ operation, sound pressure levels may be higher as a result of ambient noise.

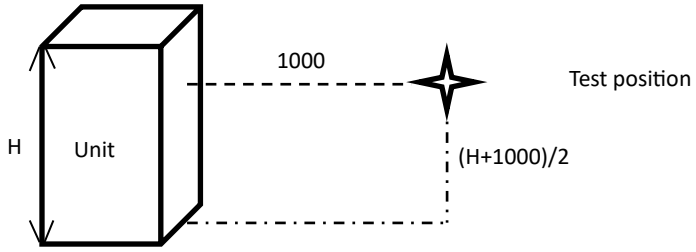

3. Antifreeze fluid is need when water temperature is less than 5℃.

4. Electric heater installed in the tank is field supplied.

2 Electrical Characteristics

System	Outdoor unit				Power current		Compressor		Fan	
	Voltage (V)	Hz	Min. (V)	Max. (V)	MCA (A)	MOP (A)	MSC (A)	RLA (A)	kW	FLA (A)
KCHP-SU65-RN8L	380-415	50	342	456	46	54	-	34.09	0.39	1.4
KCHP-SU110-RN8L	380-415	50	342	456	90	106	-	34.09	0.68	1.7

Note：

MCA: Min. Circuit Amps. (A) MOP: Maximum overcurrent protector (A)

MSC : Max. Starting Amps. (A) FLA: Full Load Amps. (A) KW: Rated Motor Output

RLA: In nominal cooling or heating test condition, the input Amps of compressor where MAX. Hz can operate Rated Load Amps. (A)

3 Dimensions and Center of Gravity

KCHP-SU65-RN8L

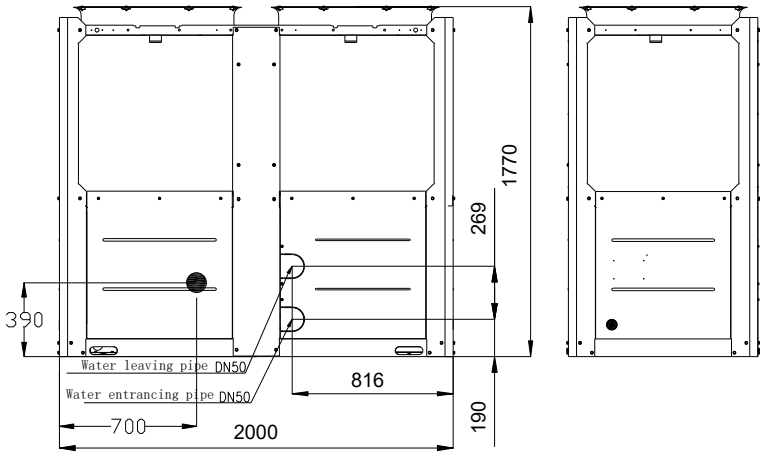

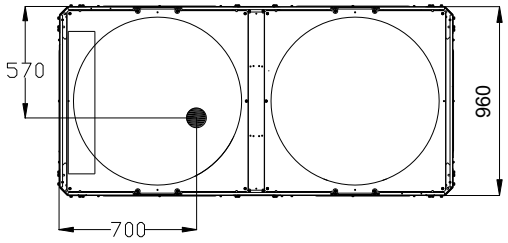

KCHP-SU110-RN8L

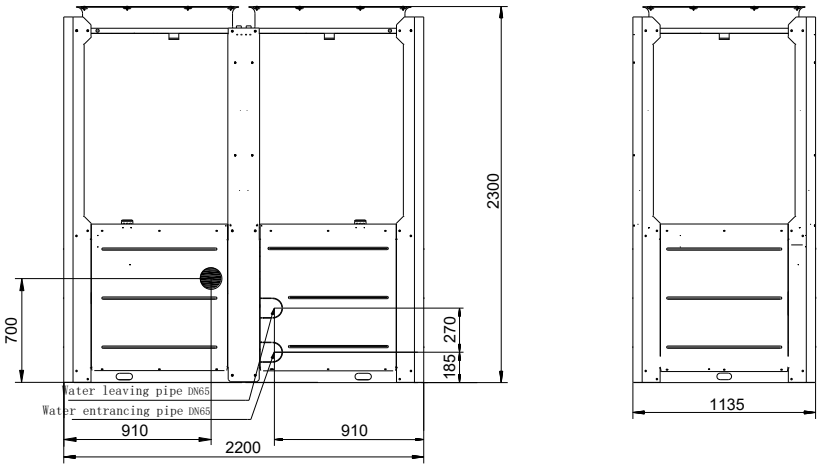

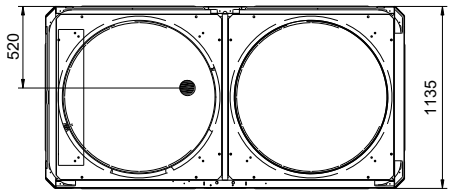

4 Capacity Tables

4.1 Heating Capacity Tables

KCHP-SU65-RN8L

LWT	DB																	
	-25			-20			-18			-15			-10			-5		
	HC	PI	COP	HC	PI	COP	HC	PI	COP	HC	PI	COP	HC	PI	COP	HC	PI	COP
25	34.40	16.05	2.14	40.00	15.68	2.55	43.38	15.02	2.89	46.15	14.89	3.10	49.10	15.72	3.12	55.17	16.98	3.25
30	32.03	17.02	1.88	37.25	16.62	2.24	42.08	15.36	2.74	44.77	15.10	2.97	47.62	15.82	3.01	53.19	17.07	3.12
35	32.47	18.98	1.71	37.76	18.53	2.04	40.15	16.59	2.42	42.71	16.36	2.61	45.44	17.19	2.64	50.78	18.46	2.75
40	30.11	19.55	1.54	35.01	19.10	1.83	40.21	20.40	1.97	42.78	19.93	2.15	45.51	20.75	2.19	51.44	21.35	2.41
45	/	/	/	35.10	22.68	1.55	39.34	22.70	1.73	41.85	21.94	1.91	44.53	22.64	1.97	51.15	24.05	2.13
48	/	/	/	33.71	27.27	1.24	38.49	27.80	1.38	40.95	25.10	1.63	43.56	24.40	1.79	50.52	25.47	1.98
50	/	/	/	/	/	/	36.20	26.35	1.37	38.51	23.79	1.62	40.97	24.00	1.71	48.47	26.05	1.86
55	/	/	/	/	/	/	/	/	/	37.36	24.14	1.55	39.74	24.17	1.64	47.64	26.58	1.79
60	/	/	/	/	/	/	/	/	/	/	/	/	38.47	25.86	1.49	45.67	28.15	1.62
65	/	/	/	/	/	/	/	/	/	/	/	/	36.30	27.44	1.32	43.78	30.36	1.44

LWT	DB																	
	0			5			7			10			15			20		
	HC	PI	COP	HC	PI	COP	HC	PI	COP	HC	PI	COP	HC	PI	COP	HC	PI	COP
25	61.23	17.56	3.49	64.88	17.59	3.69	68.96	16.00	4.31	72.27	15.92	4.54	84.00	17.32	4.85	86.77	17.44	4.98
30	58.76	17.99	3.27	62.23	17.67	3.52	66.51	15.65	4.25	71.02	16.42	4.33	79.24	16.82	4.71	83.50	17.30	4.83
35	56.13	18.31	3.06	59.56	17.69	3.37	64.00	15.24	4.20	66.41	15.52	4.28	76.43	16.75	4.56	80.79	17.24	4.69
40	57.37	20.57	2.79	61.17	19.27	3.18	64.83	18.03	3.60	67.21	17.53	3.83	74.30	17.55	4.23	75.58	16.80	4.50
45	57.77	22.75	2.54	61.75	20.56	3.00	65.00	18.31	3.55	65.85	17.93	3.67	68.53	17.26	3.97	73.73	17.64	4.18
48	57.47	24.40	2.36	61.63	20.96	2.94	64.83	20.10	3.23	65.82	18.38	3.58	68.49	17.69	3.87	73.69	18.08	4.08
50	55.98	25.62	2.18	61.19	21.32	2.87	64.51	20.50	3.15	65.30	18.63	3.51	67.96	17.93	3.79	73.12	18.32	3.99
55	55.53	26.39	2.10	60.70	21.96	2.76	64.00	21.30	3.00	63.95	20.79	3.08	66.55	20.01	3.33	71.60	20.45	3.50
60	52.87	27.76	1.90	58.67	23.45	2.50	61.95	22.82	2.72	59.45	21.61	2.75	61.86	21.19	2.92	59.82	19.65	3.04
65	51.26	30.28	1.69	56.82	25.55	2.22	60.00	25.00	2.40	54.95	22.71	2.42	57.18	22.75	2.51	43.47	16.79	2.59

LWT	DB														
	25			30			35			40			43		
	HC	PI	COP	HC	PI	COP	HC	PI	COP	HC	PI	COP	HC	PI	COP
25	91.83	17.48	5.25	97.83	16.73	5.85	98.70	14.96	6.60	99.77	14.44	6.91	98.63	13.48	7.32
30	90.57	17.67	5.13	99.39	17.75	5.60	102.3	16.01	6.39	106.1	16.33	6.50	101.1	14.99	6.74
35	88.67	17.47	5.07	98.30	18.32	5.37	104.8	17.66	5.94	108.7	18.05	6.02	102.4	16.05	6.38
40	83.15	17.17	4.84	90.99	18.46	4.93	97.13	17.30	5.61	101.6	17.84	5.69	95.17	15.85	6.00
45	80.83	18.02	4.49	82.17	17.46	4.71	88.73	16.66	5.33	90.75	16.84	5.39	85.65	15.16	5.65
48	80.78	18.48	4.37	82.12	17.90	4.59	88.69	17.08	5.19	90.70	17.27	5.25	85.61	15.54	5.51
50	80.15	18.72	4.28	81.48	18.14	4.49	87.99	17.31	5.08	89.99	17.50	5.14	84.94	15.75	5.39
55	78.49	20.90	3.76	79.79	20.25	3.94	86.17	19.32	4.46	88.13	19.53	4.51	83.18	17.58	4.73
60	65.27	20.42	3.20	62.50	19.26	3.25	67.49	18.17	3.72	69.03	18.37	3.76	65.15	16.53	3.94
65	47.65	17.16	2.78	48.44	16.63	2.91	52.31	15.51	3.37	35.89	10.05	3.57	/	/	/

Abbreviations:
HC: Total heating capacity (kW)
PI: Power input (kW)
LWT: Leaving water temperature (°C)
DB: Dry-bulb temperature for outdoor air temperature (°C)
Performance specifications measured with water pump operating at rated water flow rate.

KCHP-SU110-RN8L

LWT	DB																	
	-25			-20			-18			-15			-10			-5		
	HC	PI	COP	HC	PI	COP	HC	PI	COP	HC	PI	COP	HC	PI	COP	HC	PI	COP
25	64.57	28.55	2.26	75.08	27.89	2.69	82.07	27.51	2.98	87.56	28.72	3.05	91.93	28.07	3.27	104.0	31.15	3.34
30	59.04	27.15	2.18	68.65	26.51	2.59	78.05	26.98	2.89	82.39	28.78	2.86	88.07	28.64	3.08	98.71	31.26	3.16
35	59.70	28.93	2.06	69.42	28.25	2.46	74.53	27.01	2.76	78.76	28.45	2.77	83.55	28.10	2.97	94.05	31.07	3.03
40	52.49	30.03	1.75	61.03	29.33	2.08	69.56	28.59	2.43	74.43	28.71	2.59	78.49	28.18	2.79	89.11	31.02	2.87
45	/	/	/	59.85	47.40	1.26	67.03	34.63	1.94	71.31	32.28	2.21	75.37	31.76	2.37	87.00	35.83	2.43
48	/	/	/	57.44	47.33	1.21	64.57	34.72	1.86	69.05	32.52	2.12	73.03	32.02	2.28	84.96	36.41	2.33
50	/	/	/	/	/	/	60.18	33.56	1.79	64.13	31.33	2.05	68.44	31.13	2.20	80.67	35.86	2.25
55	/	/	/	/	/	/	/	/	/	62.50	34.27	1.82	66.56	33.98	1.96	79.73	39.77	2.00
60	/	/	/	/	/	/	/	/	/	/	/	/	64.56	38.32	1.68	77.03	44.68	1.72
65	/	/	/	/	/	/	/	/	/	/	/	/	61.18	40.67	1.50	72.99	47.41	1.54

LWT	DB																	
	0			5			7			10			15			20		
	HC	PI	COP	HC	PI	COP	HC	PI	COP	HC	PI	COP	HC	PI	COP	HC	PI	COP
25	114.7	32.43	3.54	122.5	29.93	4.09	129.0	28.48	4.53	137.8	28.91	4.77	146.2	30.29	4.83	159.8	32.30	4.95
30	108.1	32.73	3.30	115.1	30.18	3.81	122.3	29.08	4.20	134.9	29.74	4.54	144.8	31.66	4.57	153.0	32.85	4.66
35	103.7	32.44	3.20	109.7	31.01	3.54	112.0	26.99	4.15	131.0	28.90	4.53	139.3	30.30	4.60	146.4	31.06	4.71
40	99.45	33.62	2.96	106.1	30.48	3.48	111.7	28.55	3.91	127.9	29.71	4.30	133.6	30.56	4.37	136.2	30.46	4.47
45	97.85	38.43	2.55	105.1	35.08	3.00	110.0	29.89	3.68	125.6	34.00	3.70	119.1	31.53	3.78	124.8	30.39	4.11
48	97.15	39.70	2.45	103.1	35.80	2.88	108.4	30.64	3.54	123.8	34.85	3.55	117.3	32.32	3.63	122.9	31.14	3.95
50	93.53	39.64	2.36	101.9	36.70	2.78	106.6	31.27	3.41	121.8	35.57	3.42	115.4	32.99	3.50	120.9	31.79	3.80
55	92.66	44.08	2.10	100.6	40.66	2.47	106.0	35.33	3.00	120.4	39.48	3.05	114.1	36.62	3.12	119.6	35.28	3.39
60	88.41	48.91	1.81	98.41	46.26	2.13	103.4	40.06	2.58	117.4	44.76	2.62	111.3	41.51	2.68	116.6	40.00	2.92
65	86.26	53.44	1.61	95.37	50.20	1.90	100.0	42.92	2.33	113.8	48.58	2.34	92.36	36.27	2.55	96.79	34.95	2.77

LWT	DB														
	25			30			35			40			43		
	HC	PI	COP	HC	PI	COP	HC	PI	COP	HC	PI	COP	HC	PI	COP
25	173.4	34.54	5.02	178.8	34.94	5.12	184.3	34.07	5.41	175.9	27.97	6.29	171.7	26.81	6.40
30	161.2	34.16	4.72	165.8	32.55	5.09	170.4	31.86	5.35	160.8	26.60	6.04	156.0	25.51	6.12
35	150.8	31.09	4.85	154.7	30.57	5.06	160.5	30.89	5.20	148.8	26.27	5.66	144.6	25.22	5.73
40	139.3	30.28	4.60	135.8	27.67	4.91	142.6	28.14	5.07	131.7	25.43	5.18	126.2	23.99	5.26
45	126.7	29.82	4.25	120.2	27.16	4.43	126.9	28.16	4.51	115.3	24.58	4.69	109.4	23.10	4.74
48	124.8	30.56	4.08	118.4	27.84	4.25	125.0	28.86	4.33	113.5	26.02	4.36	107.8	24.30	4.43
50	122.8	31.19	3.94	116.5	28.42	4.10	123.0	29.46	4.18	111.7	26.08	4.28	106.0	24.53	4.32
55	121.4	34.62	3.51	115.2	31.54	3.65	121.7	32.70	3.72	110.5	29.28	3.77	104.9	27.23	3.85
60	118.4	39.25	3.02	102.5	31.54	3.25	108.3	32.70	3.31	98.33	28.63	3.43	93.34	26.06	3.58
65	98.25	34.29	2.87	53.32	17.26	3.09	56.31	17.90	3.15	51.13	15.67	3.26	/	/	/

Abbreviations:
HC: Total heating capacity (kW)
PI: Power input (kW)
LWT: Leaving water temperature (°C)
DB: Dry-bulb temperature for outdoor air temperature (°C)
Performance specifications measured with water pump operating at rated water flow rate.

4.2 Cooling Capacity Tables

KCHP-SU65-RN8L

LWT	DB																	
	-15			-10			-5			0			5			10		
	CC	PI	EER	CC	PI	EER	CC	PI	EER	CC	PI	EER	CC	PI	EER	CC	PI	EER
0	/	/	/	/	/	/	/	/	/	/	/	/	/	/	/	45.35	10.26	4.42
5	/	/	/	/	/	/	/	/	/	/	/	/	/	/	/	50.22	10.87	4.62
7	/	/	/	/	/	/	/	/	/	/	/	/	/	/	/	53.33	11.42	4.67
10	50.41	7.14	7.06	49.81	7.27	6.85	49.20	7.74	6.36	47.51	8.28	5.74	46.12	8.78	5.25	56.65	11.51	4.92
15	57.64	7.20	8.01	56.96	7.32	7.78	56.15	8.16	6.88	53.59	8.03	6.67	52.72	8.14	6.48	61.52	9.84	6.25
20	63.88	7.89	8.10	63.12	7.95	7.94	62.55	8.48	7.38	61.65	8.64	7.14	59.94	8.51	7.05	71.25	10.25	6.95

LWT	DB																	
	15			20			25			30			35			40		
	CC	PI	EER	CC	PI	EER	CC	PI	EER	CC	PI	EER	CC	PI	EER	CC	PI	EER
0	50.13	12.47	4.02	49.40	12.77	3.87	48.73	13.18	3.70	48.00	15.73	3.05	46.37	17.25	2.69	42.66	17.22	2.48
5	58.24	13.32	4.37	57.13	13.63	4.19	55.00	14.08	3.91	53.62	16.80	3.19	52.34	18.43	2.84	48.15	18.39	2.62
7	62.53	14.27	4.38	61.65	14.46	4.26	60.43	15.11	4.00	58.38	17.06	3.42	57.00	19.00	3.00	51.87	18.89	2.75
10	66.16	14.63	4.52	65.37	14.95	4.37	64.53	15.06	4.29	62.60	17.55	3.57	61.00	19.24	3.17	54.29	18.44	2.94
15	73.04	12.99	5.62	72.24	13.79	5.24	70.63	14.71	4.80	67.99	16.24	4.19	64.16	17.39	3.69	58.21	16.92	3.44
20	84.80	14.13	6.00	84.01	15.19	5.53	82.54	16.48	5.01	81.66	17.87	4.57	78.52	18.05	4.35	68.31	16.65	4.10

LWT	DB								
	43			45			48		
	CC	PI	EER	CC	PI	EER	CC	PI	EER
0	40.34	18.11	2.23	37.10	17.40	2.13	27.36	17.24	1.59
5	46.06	19.57	2.35	41.35	18.35	2.25	28.79	16.60	1.73
7	49.02	19.11	2.57	43.89	18.25	2.40	30.21	15.37	1.97
10	51.24	18.85	2.72	46.36	18.03	2.57	31.11	13.59	2.29
15	48.76	15.07	3.23	41.70	13.72	3.04	31.44	10.96	2.87
20	57.32	15.47	3.70	50.25	14.91	3.37	36.12	11.79	3.06

Abbreviations:
CC: Total cooling capacity (kW)
PI: Power input (kW)
LWT: Leaving water temperature (°C)
DB: Dry-bulb temperature for outdoor air temperature (°C)
Notes: Performance specifications measured with water pump operating at rated water flow rate.

KCHP-SU110-RN8L

LWT	DB																	
	-15			-10			-5			0			5			10		
	CC	PI	EER	CC	PI	EER	CC	PI	EER	CC	PI	EER	CC	PI	EER	CC	PI	EER
0	/	/	/	/	/	/	/	/	/	/	/	/	/	/	/	77.82	18.98	4.10
5	/	/	/	/	/	/	/	/	/	/	/	/	/	/	/	90.04	20.84	4.32
7	/	/	/	/	/	/	/	/	/	/	/	/	/	/	/	94.88	21.42	4.43
10	88.94	16.30	5.46	88.06	16.63	5.30	86.83	16.70	5.20	85.66	16.93	5.06	84.50	17.18	4.92	97.30	20.61	4.72
15	114.8	18.49	6.21	113.7	18.86	6.03	112.0	18.81	5.95	110.9	18.96	5.85	109.9	19.11	5.75	109.2	19.36	5.64
20	124.2	17.55	7.08	123.0	17.90	6.87	121.6	18.25	6.66	120.3	18.40	6.54	119.1	18.56	6.42	118.7	18.78	6.32

LWT	DB																	
	15			20			25			30			35			40		
	CC	PI	EER	CC	PI	EER	CC	PI	EER	CC	PI	EER	CC	PI	EER	CC	PI	EER
0	89.20	24.70	3.61	88.12	26.17	3.37	87.00	26.64	3.27	82.39	28.91	2.85	80.94	32.37	2.50	70.92	30.60	2.32
5	104.1	26.23	3.97	100.1	27.08	3.70	99.20	27.35	3.63	95.84	30.38	3.15	93.72	34.38	2.73	80.59	32.59	2.47
7	109.5	26.78	4.09	106.8	27.36	3.90	105.5	27.50	3.84	101.7	31.11	3.27	100.0	32.78	3.05	85.94	32.34	2.66
10	110.3	26.43	4.17	108.1	27.07	3.99	107.1	27.79	3.85	105.0	30.90	3.40	103.0	33.11	3.11	92.61	32.57	2.84
15	126.8	26.58	4.77	124.3	27.73	4.48	123.1	28.27	4.36	120.8	32.31	3.74	118.4	32.98	3.59	108.5	34.75	3.12
20	140.7	28.20	4.99	137.9	29.01	4.75	136.6	29.65	4.61	134.0	33.73	3.97	131.4	33.51	3.92	112.7	32.44	3.47

LWT	DB								
	43			45			48		
	CC	PI	EER	CC	PI	EER	CC	PI	EER
0	67.47	31.76	2.12	59.26	29.56	2.00	45.23	26.64	1.70
5	77.46	33.93	2.28	67.34	31.31	2.15	51.63	27.18	1.90
7	82.97	34.50	2.41	71.73	31.34	2.29	52.71	23.93	2.20
10	88.76	34.31	2.59	76.87	30.55	2.52	57.47	24.15	2.38
15	92.62	30.78	3.01	78.88	26.98	2.92	58.57	21.58	2.71
20	91.93	27.70	3.32	80.80	25.53	3.17	52.01	17.70	2.94

Abbreviations:
CC: Total cooling capacity (kW)
PI: Power input (kW)
LWT: Leaving water temperature (°C)
DB: Dry-bulb temperature for outdoor air temperature (°C)
Notes: Performance specifications measured with water pump operating at rated water flow rate.

5 Performance Adjustment Factors

5.1 Ethylene and Propylene Glycol factors

The antifreeze must be required according to anyone condition as following:

- The ambient temperature is below 0 °C;
- Don't start up the unit for a long time.
- The power supply was cut off and needn't change the water in system.

A glycol solution is required when the unit with condition as mentioned. The use of glycol will reduce the performance of the unit depending on concentration.

Concentration of ethylene glycol (%)	Modification coefficient				Freezing point (°C)
	Cooling capacity	Power input	Water resistance	Water flow	
0	1.000	1.000	1.000	1.000	0
10	0.984	0.998	1.118	1.019	-4
20	0.973	0.995	1.268	1.051	-9
30	0.965	0.992	1.482	1.092	-16
40	0.960	0.989	1.791	1.145	-23
50	0.950	0.983	2.100	1.200	-37

Concentration of propylene glycol (%)	Modification coefficient				Freezing point (°C)
	Cooling capacity	Power input	Water resistance	Water flow	
0	1.000	1.000	1.000	1.000	0
10	0.976	0.996	1.071	1.00	-3
20	0.961	0.992	1.189	1.016	-7
30	0.948	0.988	1.380	1.034	-13
40	0.938	0.984	1.728	1.078	-22
50	0.925	0.975	2.150	1.125	-35

5.2 Evaporator temperature drop factors

Performance tables are based on a 5°C temperature drop through the evaporator. Temperature drops outside this range can affect the control system's capability to maintain acceptable control and are not recommended.

5.3 Altitude correction factors

Performance tables are based at sea level. Elevations other than sea level affect the performance of the unit. The decreased air density will reduce condenser capacity and reduce the unit's performance. Maximum allowable altitude is 1800meters.

5.4 Fouling factor

Fouling refers to the accumulation of unwanted material on solid surfaces, most often in an aquatic environment. The fouling material can consist of either living organisms (biofouling) or a non-living substance (inorganic or organic). Fouling is usually distinguished from other surface-growth phenomena in that it occurs on a surface of a component, system or plant performing a defined and useful function, and that the fouling process impedes or interferes with this function.

Other terms used in the literature to describe fouling include: deposit formation, encrustation, crudding, deposition, scaling, scale formation, slagging, and sludge formation. The last six terms have a more narrow meaning than fouling within the scope of

the fouling science and technology, and they also have meanings outside of this scope; therefore, they should be used with caution.

Fouling phenomena are common and diverse, ranging from fouling of ship hulls, natural surfaces in the marine environment (marine fouling), fouling of heat-transfer components through ingredients contained in the cooling water or gases, and even the development of plaque or calculus on teeth, or deposits on solar panels on Mars, among other examples.

Foreign matter in the chilled water system will adversely affect the heat transfer capability of the evaporator, and could in crease the pressure drop and reduce the water flow. To provide optimum unit operation, proper water treatment must be maintained. Refer to the able as following.

ALTITUDE (m)	Difference of water inlet and outlet temp. (°C)	Fouling Factor							
		0.018 m2. °C /kW		0.044 m2. °C /kW		0.086 m2. °C /kW		0.172 m2. °C /kW	
		C	P	C	P	C	P	C	P
Sea level	3	1.036	1.077	1.019	1.076	0.991	0.975	0.963	0.983
	4	1.039	1.101	1.022	1.080	0.994	0.996	0.971	0.984
	5	1.045	1.105	1.028	1.086	1.000	1.000	0.977	0.989
	6	1.051	1.109	1.034	1.093	1.006	1.004	0.983	0.994
600	3	1.024	1.087	1.008	1.064	0.980	0.984	0.951	0.991
	4	1.027	1.111	1.011	1.068	0.983	1.005	0.959	0.992
	5	1.034	1.115	1.017	1.074	0.989	1.009	0.965	0.997
	6	1.043	1.115	1.026	1.084	0.998	1.009	0.973	0.999
1200	3	1.013	1.117	0.996	1.052	0.969	1.011	0.942	1.002
	4	1.015	1.118	0.998	1.055	0.971	1.012	0.948	1.003
	5	1.023	1.122	1.006	1.063	0.979	1.015	0.955	1.005
	6	1.031	1.125	1.015	1.072	0.987	1.018	0.962	1.007
1800	3	1.002	1.128	0.986	1.042	0.959	1.021	0.935	1.007
	4	1.005	1.129	0.989	1.045	0.962	1.022	0.941	1.010
	5	1.012	1.132	0.995	1.051	0.968	1.024	0.945	1.012
	6	1.018	1.134	1.001	1.058	0.974	1.026	0.949	1.014

Abbreviations:
C: Cooling capacity
P: Power input

6 Hydronic Performance

KCHP-SU65-RN8L

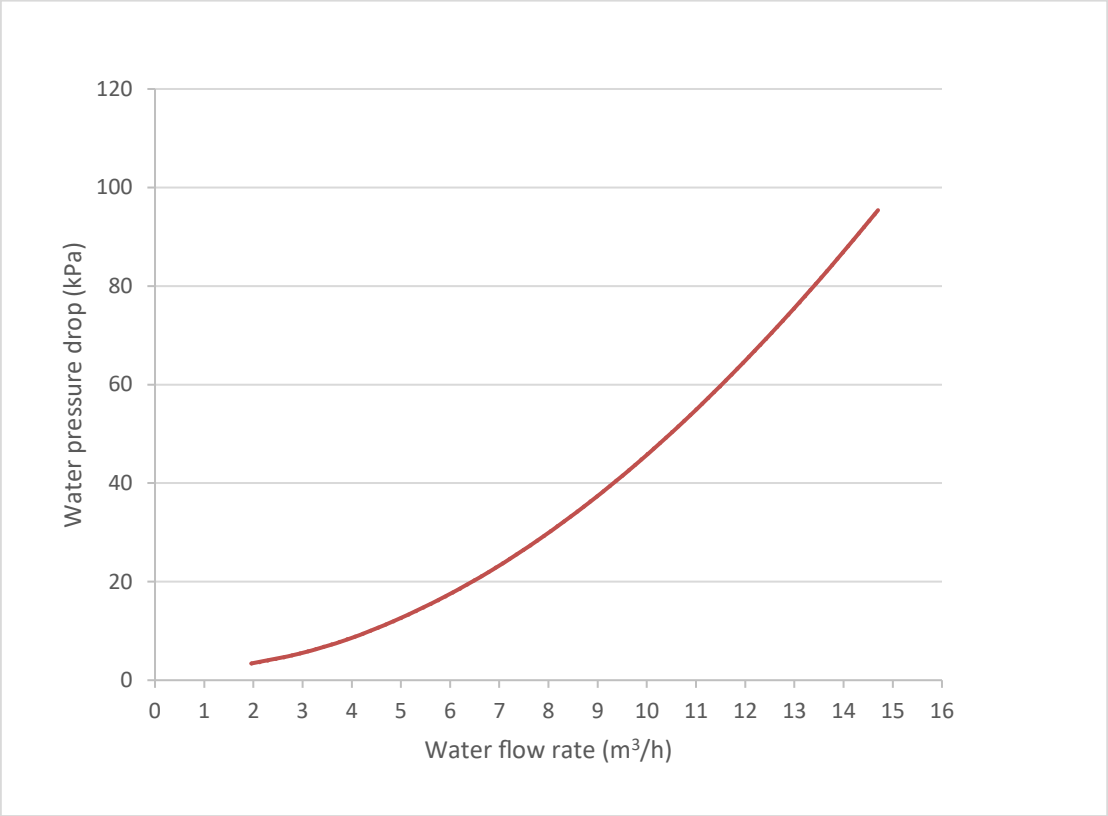

KCHP-SU110-RN8L

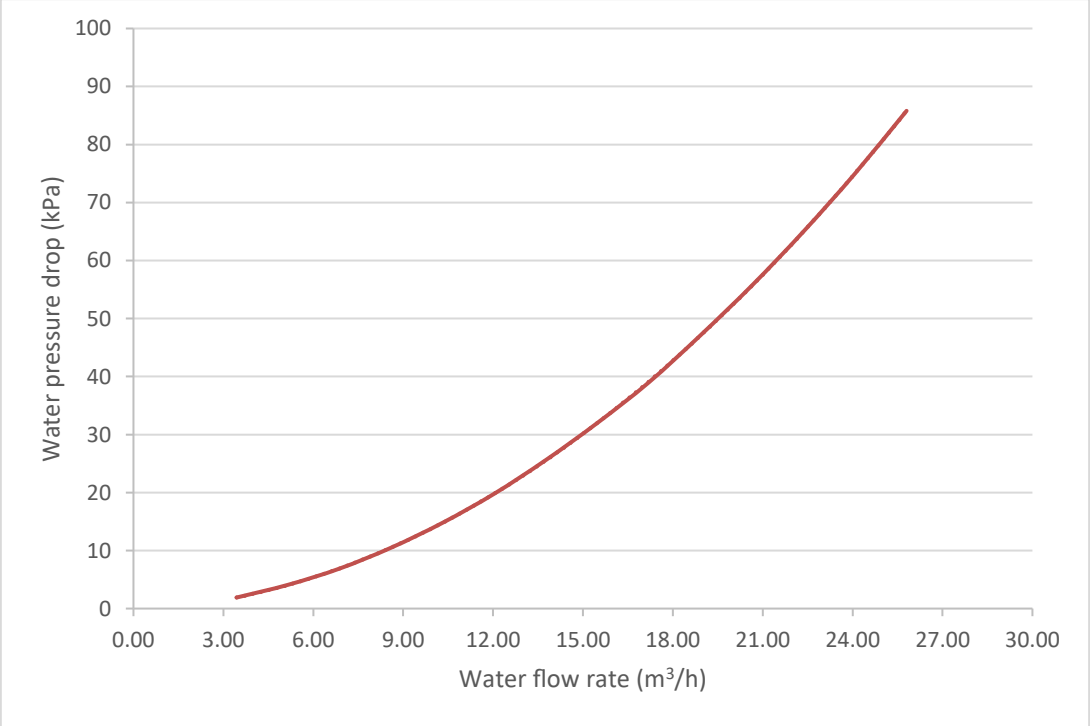

7 Octave Band Levels

KCHP-SU65-RN8L

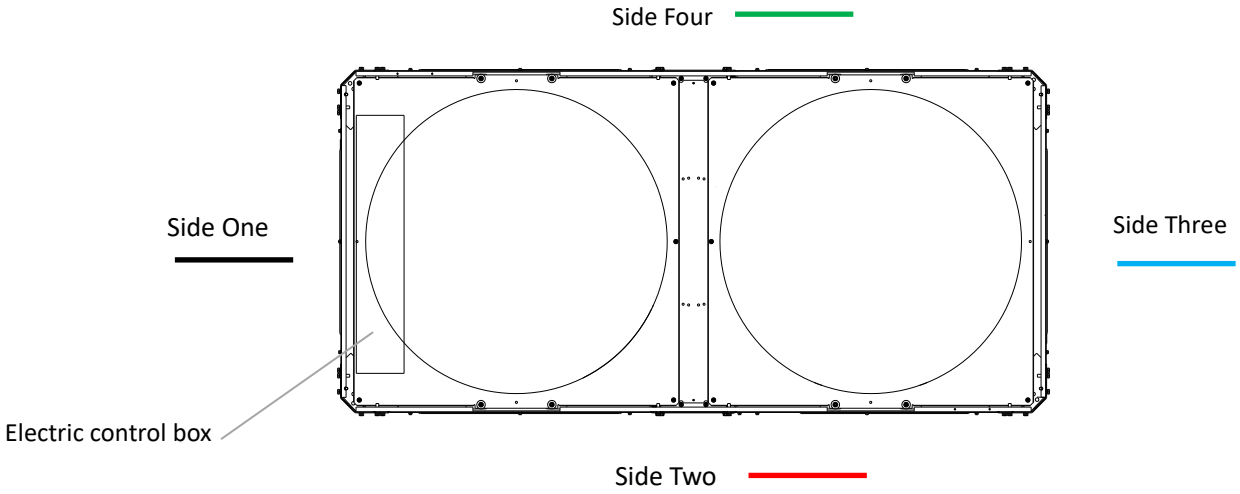

Test condition：Outdoor ambient temperature 35°C DB. EWT 12°C, LWT 7°C

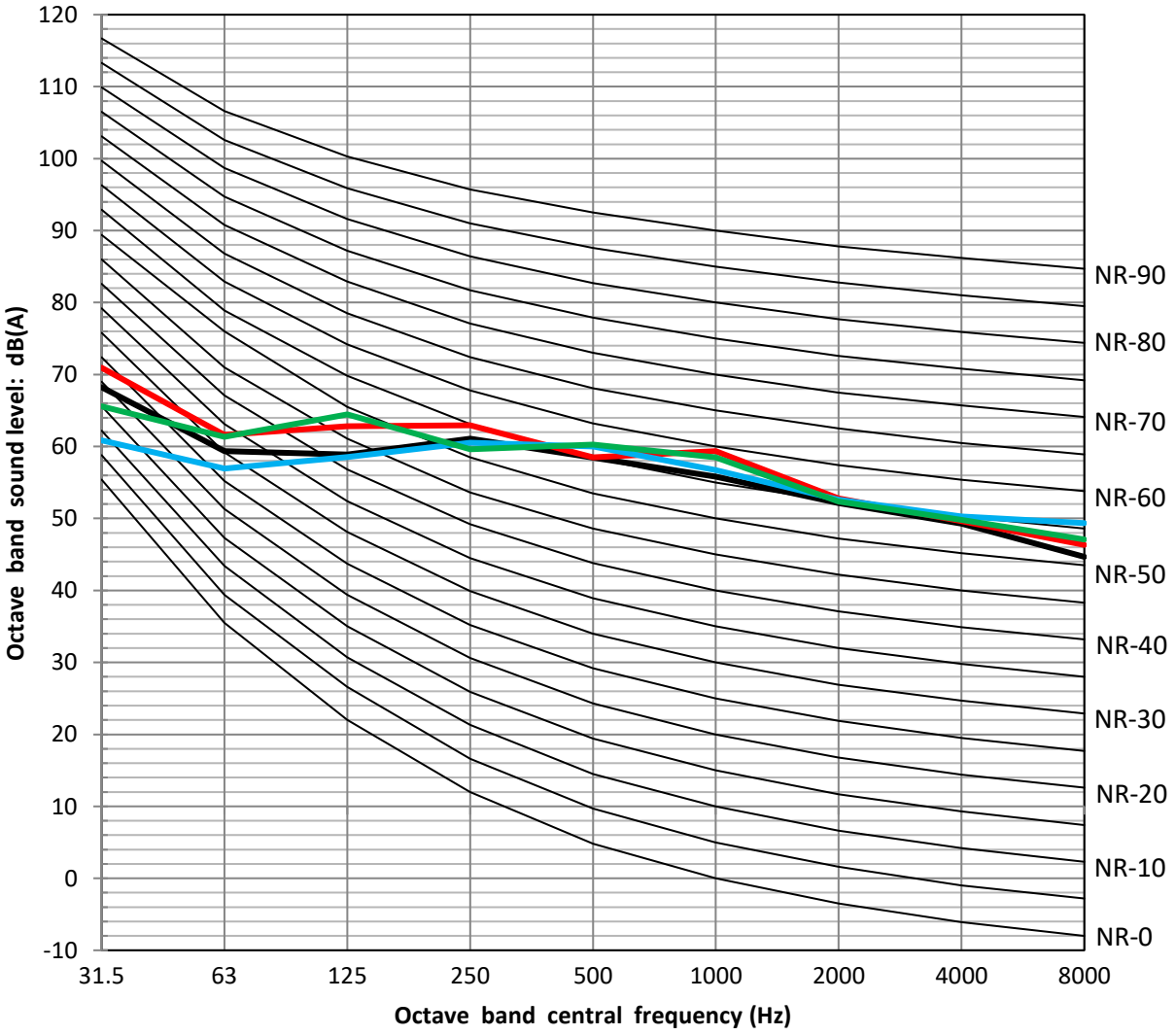

KCHP-SU110-RN8L

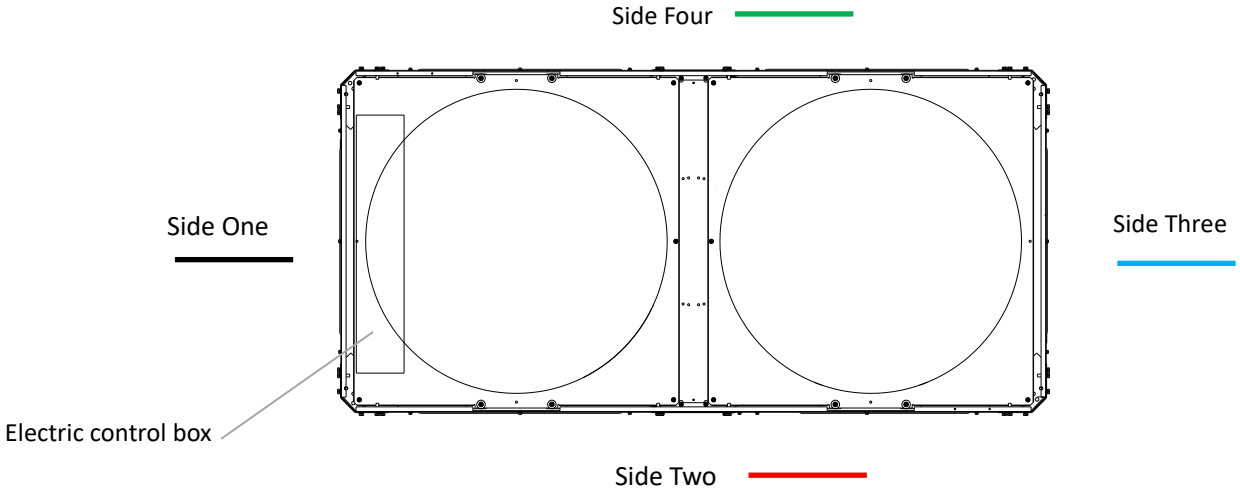

Test condition：Outdoor ambient temperature 35°C DB. EWT 12°C, LWT 7°C

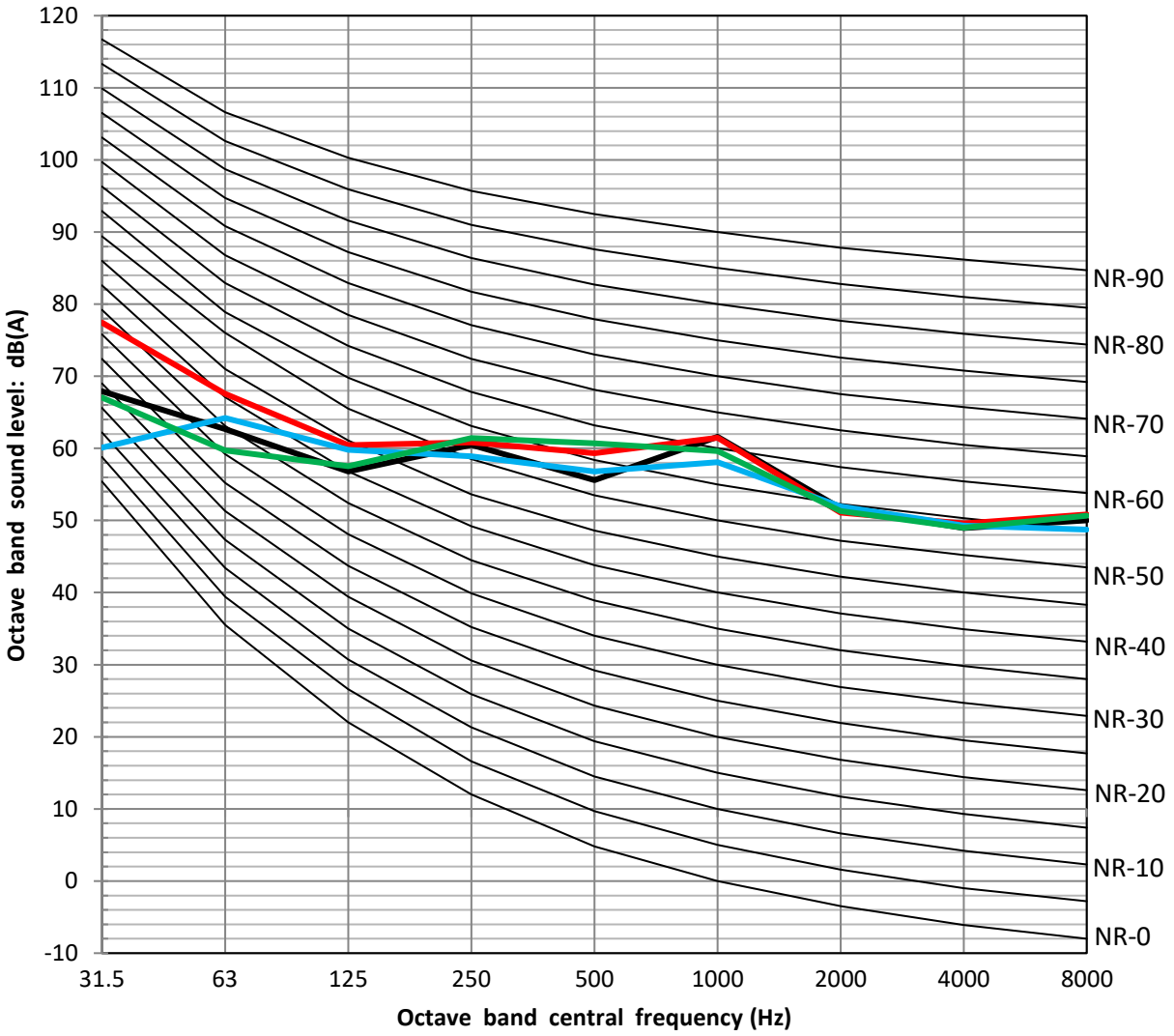

Part 3

User Interface

Field Settings

1 Introduction 26

2 SERVICE MENU 27

3 PROJECT MENU 35

4 Parameters setting 39

1 Introduction

During installation, the unit's settings and parameters should be configured by the installer to suit the installation configuration, climate conditions and end-user preferences. The relevant settings are accessible and programmable through the SERVICE and PROJECT menu on the wired controller's user interface.

KJRM-120H2/BMWKO-E

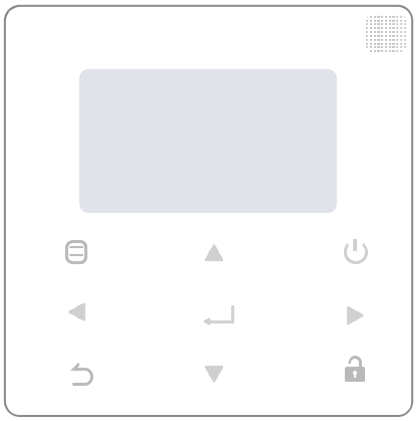

Icon	Function
	Enter the menu structure from the home page
	Navigate the cursor on the display/navigate in the menu structure/ adjust the settings
	Turn on or off the space operation mode
	Come back to the up level
	Long press for unlocking /locking the controller
	Go to the next step when programming a schedule in the menu structure / confirm a selection/enter a submenu in the menu structure

2 SERVICE MENU

2.1 Structure

For SERVICE Menu

1. STATE QUERY
2. CLEAR HSITORY ERRORS
3. SETTING ADDRESS
4. HEAT CONTROL
5. TEMPERATURE COMPENSATION
6. PUMP CONTROL
7. MANUAL DEFROST
8. LOW OUTLET WATER CONTROL
9. VACUMM SWITCH
10. ENERGY SAVING SWITCH
11. DHW ENABLE
12. FACTORY DATA RESET

1. STATE QUERY

2. CLEAR HISTORY ERRORS
CLEAR UNIT HISTORY ERRORS
CLEAR ALL HISTORY ERRORS
CLEAR LOCK ERRORR
CLEAR RUN TIME

3. SETTING ADDRESS
CONTROLLER ADDRESS
CONTROL ENABEL
MODBUS ENABLE
MODBUS ADDRESS

4. HEAT CONTROL
HEAT1
HEAT2
FORCED HEAT2 OPEN

5. TEMPERATURE COMPENSATION
COOL MODE ENABLE
T4_COOL_1
T4_COOL_2
OFFSET-C
HEAT MODE ENABLE
T4_HEAT_1
T4_HEAT_2

6. PUMP CONTROL
FORCED PUMP OPEN
INV PUMP SETTING
PUMP ON/OFF TIME

7. MANUAL DEFROST

8. LOW OUTLETWATER CONTROL

9. VACUUM SWITCH

10. ENERGY SAVING SWITCH

11. DHW ENABLE

12. FACTORY DATA RESET

2.2 Service Menu

MENU > **Service Menu**

Service Menu allows installers to input the system configuration and set the system parameters. Enter the password, using ◄ ► to navigate between digits and using ▼ ▲ to adjust the numerical values, and then press ↵. The password is 234.

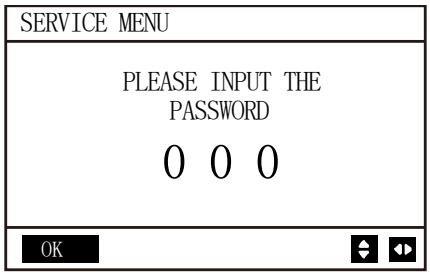

The following pages will be displayed after putting the password.

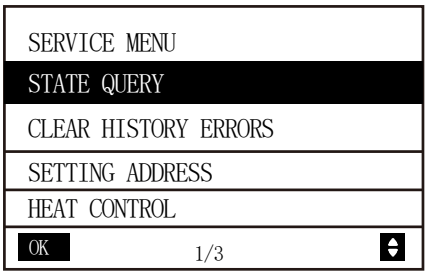

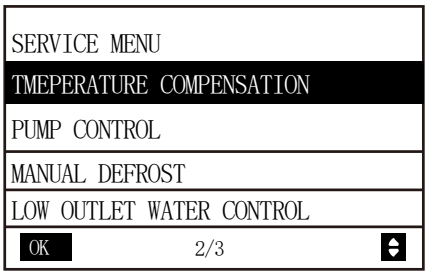

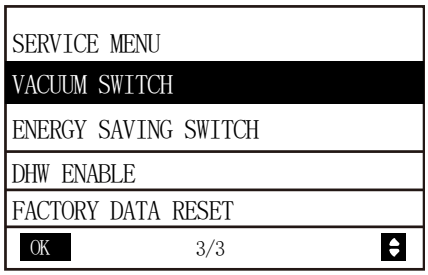

2.3 State query

MENU > **Service Menu** > **State query**

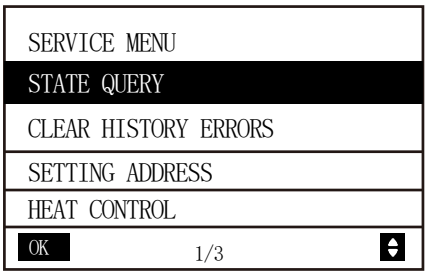

STATE QUERY allows installers to check the operation parameters. Press ◄ ► to select the address of units.

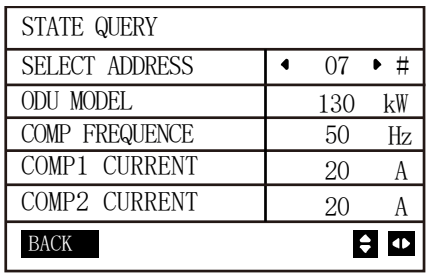

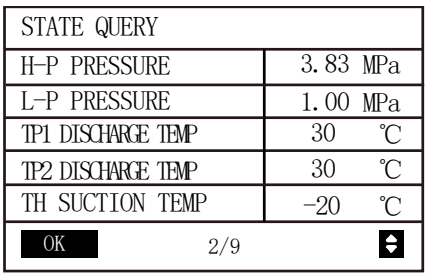

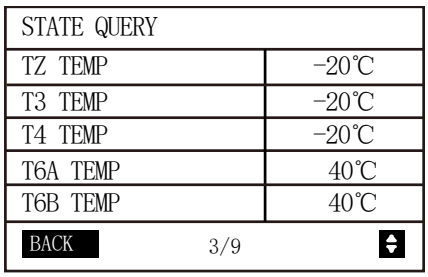

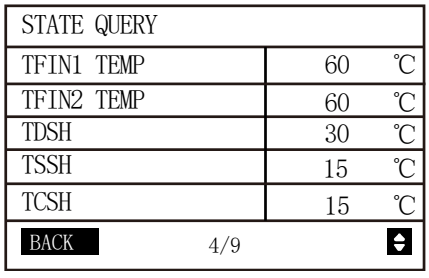

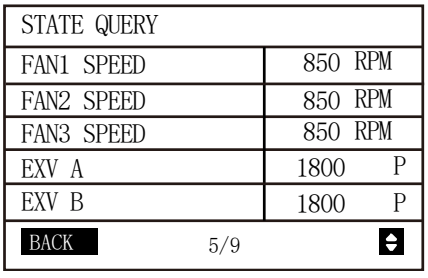

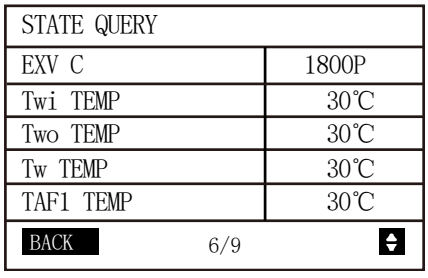

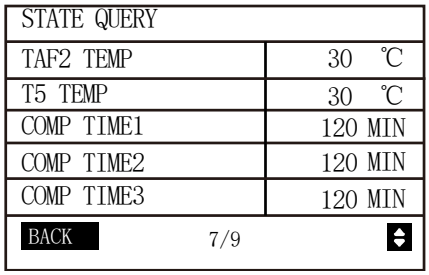

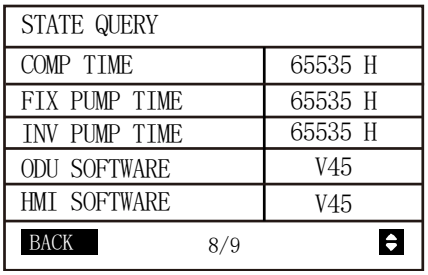

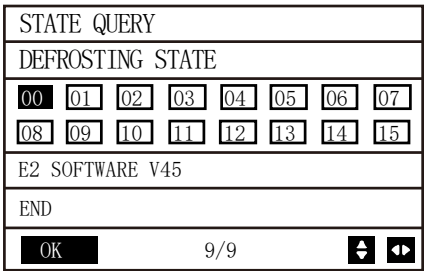

Note:

1. Tz plate heat exchanger outlet temperature
   T3 lowest temperature of condenser tube
   T4 ambient temperature
   T6A, T6B EVI plate heat exchanger refrigerant temperature
   Tfin1, Tfin2 inverter module temperature
   TDSH Discharge superheat temperature
   TSSH Suction superheat temperature
   TCSH Injection superheat temperature
   Twi Unit water inlet temperature
   Two Unit water outlet temperature
   Tw Total water outlet temperature
   Taf1 tank antifreeze temperature
   Taf2 Water side antifreeze temperature
   T5 Water tank temperature
2. For ODU SOFWARE and HMI SOFTWARE, the version number will vary with product iterations.

2.4 Clear history errors

MENU > **Service Menu** > **Clear history errors**

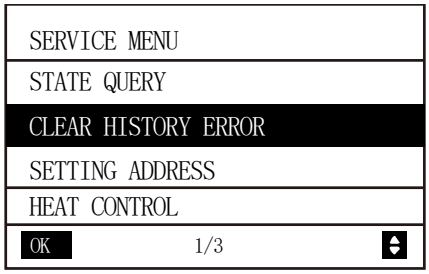

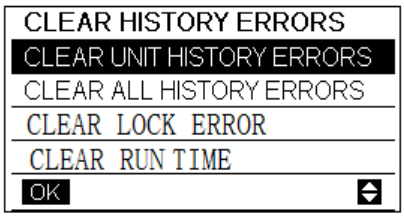

CLEAR HISTORY ERRORS is used to clear the history error codes and component operation time.

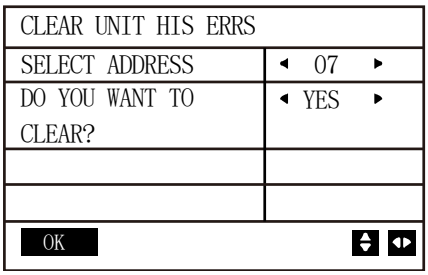

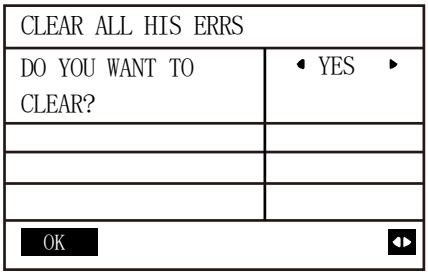

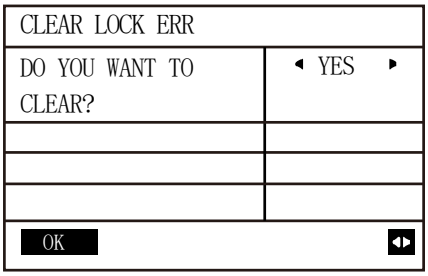

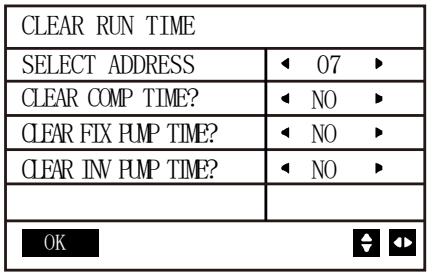

2.5 Setting address

MENU > **Service Menu** > **Setting address**

SERVICE MENU
STATE QUERY
CLEAR HISTORY ERROR
SETTING ADDRESS
HEAT CONTROL
OK 1/3

SETTING ADDRESS is used to set whether the unit can be controlled by wired controller and through MDOBUS. SETTING ADDRESS can also enter by combining buttons pressing, ► for 3s.

CONTROLLER ADDRESS	◄ 10 ► #
CONTROL ENABEL	◄ NO ►
MODBUS ENABLE	◄ NO ►
MODBUS ADDRESS	◄ 10 ► #
OK	

CONTROLLER ADDRESS selects the unit address then we can check the parameters about this unit.

If CONTROL ENABLE sets as YES, it means the controller can set all the parameters; if CONTROL ENABLE sets as NO, it means the controller can only display the parameters.

If the chiller system access to MODBUS system, MODBUS ENABLE should be set as YES. Please note that in this case, **COMTROL ENABLE** should be also set as YES, otherwise the units cannot be controlled.

MODBUS ADDRESS set the controller address if the Modbus system is available.

2.6 Heat control

MENU > **Service Menu** > **Heat control**

SERVICE MENU
STATE QUERY
CLEAR HISTORY ERROR
SETTING ADDRESS
HEAT CONTROL
OK 1/3

HEAT CONTROL
HEAT1
HEAT2
FORCED HEAT2 OPEN
OK

HEAT1 means pipe electric heating in cooling/heating mode.

HEAT2 means tank electric heating in DHW mode.

HEAT1	
HEAT1 ENABLE	◄ NO ►
TEMP-AUXHEAT1-ON	◄ 07 ► ℃
TW.HEAT1-ON	◄ 25 ► ℃
TW.HEAT1-OFF	◄ 45 ► ℃
OK 1/2	

HEAT2	
ALL HEAT2 DISABLE	◄ YES ►
SELECT ADDRESS	◄ 10 ► #
HEAT2-ENABLE	◄ NO ►
T-HEAT2-DELAY	◄ 190 ► MIN
DT5-HEAT2-OFF	◄ 10 ► ℃
OK 1/2	

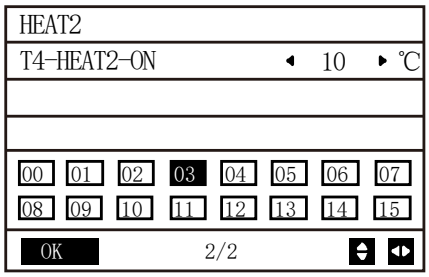

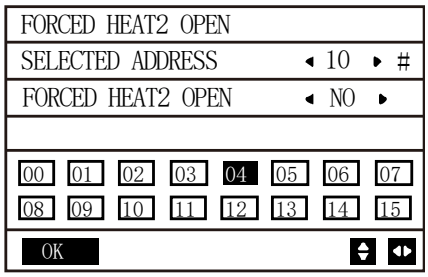

TEMP-AUXHEAT1-ON sets the ambient temperature below which the pipe heater (field supplied) turns on.

When the leaving water temperature reaches TW. HEAT1-ON, the pipe electric heater (field supplied) turns on automatically.

When the leaving water temperature reaches TW. HEAT1-OFF, the pipe electric heater (field supplied) turns off automatically.

If the system is installed with tank booster heater, ALL HEAT2 DISABLE should be set as YES.

HEAT2-ENABLE sets the state of tank booster heater of SELECT ADDRESS.

T-HEAT2-DELAY sets the delay time for tank booster heater to turn on after the compressor starts.

DT5-HEAT2-OFF sets the temperature difference between the actual water temperature and setting temperature above which the tank booster heater turns off.

T4_HEAT2_ON sets the ambient temperature that tank booster heater turns on. (00~15 means unit address)

If **FORCED HEAT2 OPEN** is set as YES, when T5<T5S-1, then tank electric heater turns on; when T5≥T5S, then tank electric heater off. (00~15 means unit address)

2.7 Temperature Compensation

MENU > **Service Menu** > **Temperature Compensation**

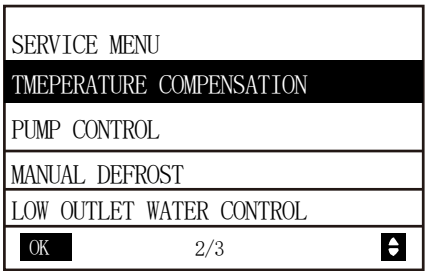

With the help of **TEMPERATURE COMPENSATION**, water temperature will automatically change as outside air temperature changes. When outdoor air temperature increases/decreases, the heating load will decrease/increase and water temperature will decrease/increase automatically. When outdoor air temperature decreases/increases, the cooling load will decrease/increase and water temperature will increase/decrease automatically.

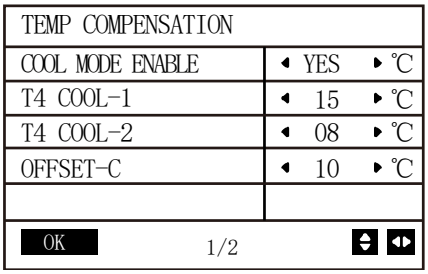

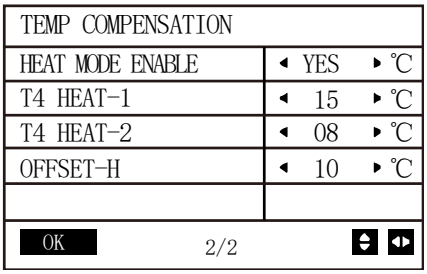

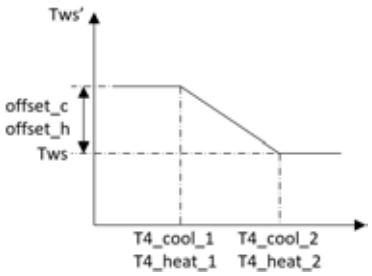

T4 COOL-1, **T4 COOL-2** set the ambient temperature for cooling mode.

T4 HEAT-1, **T4 HEAT-2** set the ambient temperature for heating mode.

Offset_c, **Offset_h** is the temperature difference between current water temperature and T4_cool_1, T4_heat_1 corresponding water temperature.

2.8 Pump Control

MENU > **Service Menu** > **Pump Control**

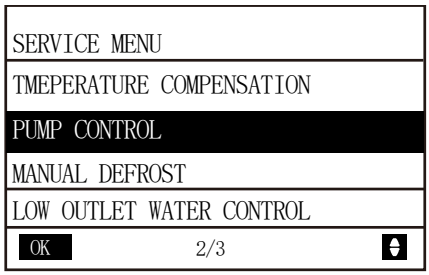

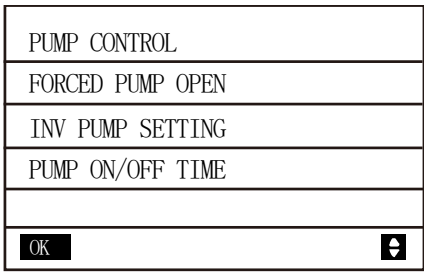

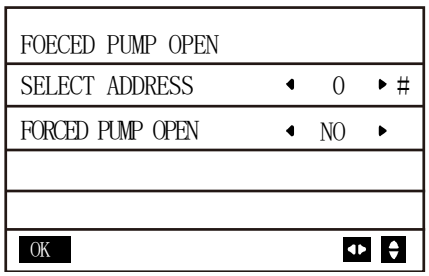

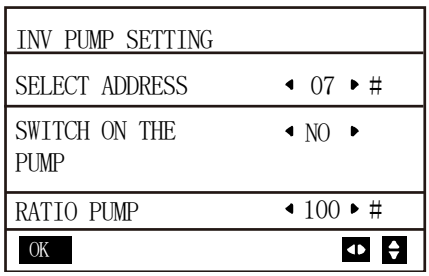

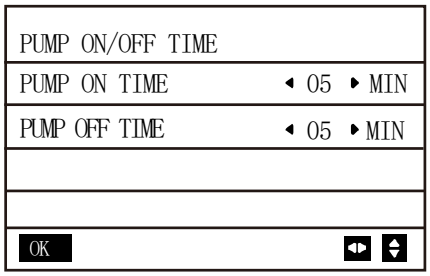

FORCED PUMP OPEN is used to control the fixed frequency pump (filed supplied) operation.

INV PUMP SETTING is used to control the inverter water pump (field supplied) operation, the setting range of RATIO-PUMP is 30%-100%. It should ensure its flow meet the requirement of whole unit, otherwise the unit may be damaged.

PUMP ON TIME sets the pump operation time after the unit stops.

If PUMP OFF TIME sets as 0, the pump will run all the time. Otherwise, the pump will operate intermittently according to the PUMP ON TIME and PUMP OFF TIME setting.

	Set range	Default value	Adjustment range
PUMP ON TIME	5~60min	5	5
PUMP OFF TIME	0~60min	0	5

2.9 Manual Defrost

MENU > **Service Menu** > **Manual Defrost**

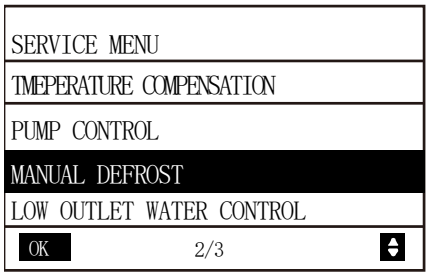

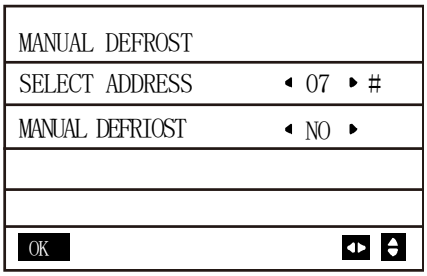

MANUAL DEFROST can force the unit to enter the defrost mode manually.

If the external unit successfully enters the defrost mode after the “MANUAL DEFROST” is turned on, the defrost icon will be displayed at homepage of the wired controller.

2.10 Low outlet water temperature control

MENU > Service Menu > Low outlet water temperature control

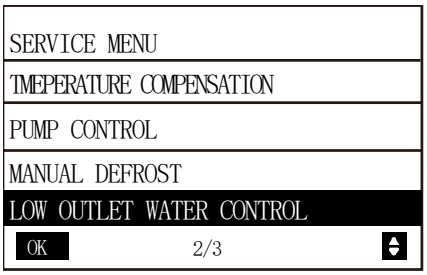

At this page, the historical minimum water outlet temperature setting (setting range 0-20℃) can be viewed.

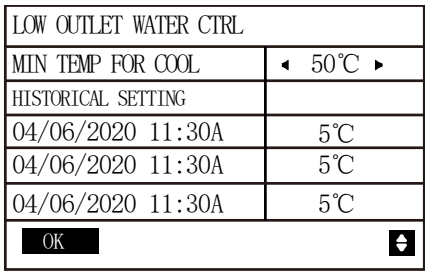

MIN TEMP FOR COOL sets the lowest water temperature for cooling mode. Please notice that When the setting temperature is less than 5℃, antifreeze liquid should be added in the water system.

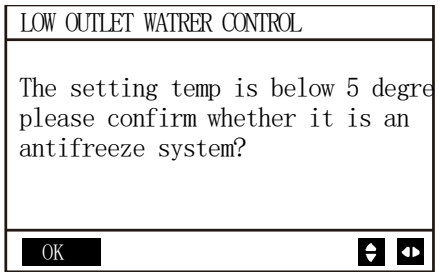

2.11 Vacuum switch

MENU > Service Menu > Vacuum switch

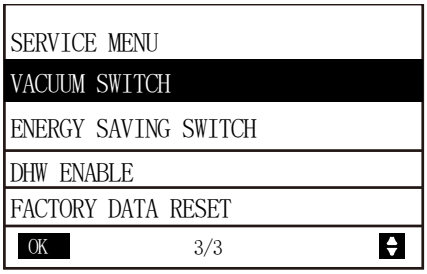

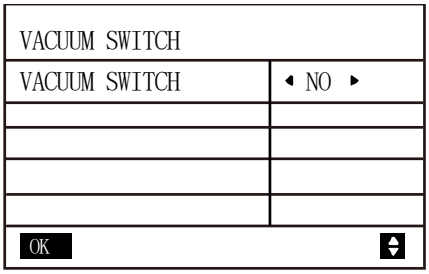

VACUUM SWITCH is used for vacuuming.

2.12 Energy saving mode

MENU > Service Menu > Energy saving mode

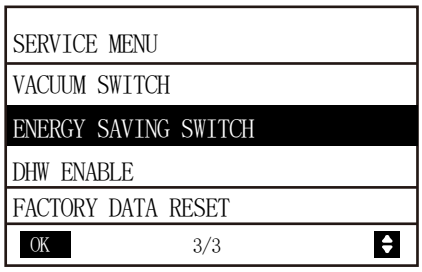

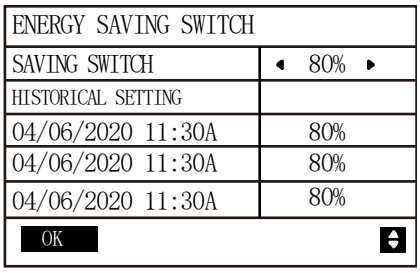

For projects with temporary electricity supply restrictions, the outdoor unit supports 7 levels of energy management which can be set to output 40-100% capacity. It prevents tripping during electricity supply restriction conditions and remains system continue to operate. The historical energy saving switch setting can be viewed.

2.13 DHW ENABLE

MENU > Service Menu > DHW ENABLE

Domestic hot water function can be customized.

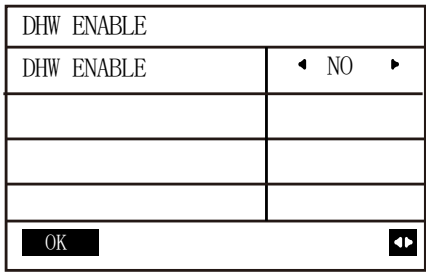

2.14 Factory data reset

MENU > Service Menu > Factory data reset

Factory data reset is used to reset all the data to the factory default setting.

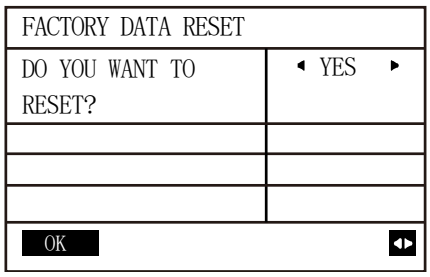

3 PROJECT MENU

3.1 Structure

For PROJECT Menu

1. SET UNIT-AIRCONDITIONING
2. SET PARALLEL UNIT
3. SET UNIT PROTECTION
4. SET DEFROSTING
5. SET DHW TIME
6. SET E9 TIME
7. INV PUMP RATIO
8. CHECK PARTS

1. SET UNIT-AIRCONDITIONING
TWO_COOL_DIFF
TWO_HEAT_DIFF
DT5_ON
DTIS5
DtTws

2. SET PARALLEL UNIT
TIM_CAP_ADJ
TW_COOL_DIFF
TW_HEAT_DIF
RATIO_COOL_FIRST
RATIO_HEAT_FIRST

3. SET UNIT PROTECTION
T_DIFF_PRO
TWI_O_ABNORMAL

4. SET DEFROSTING
T_FROST
T_DEFROST_IN
T_DEFROST_OUT

5. SET DHW TIME
SELECT ADDRESS
COOL MIN TIME 0.5h
COOL MAX TIME
HEAT MIN TIME
HEAT MAX TIME
DHW MIN TIME
DHW MAX TIME

6. SET E9 TIME
E9 PROTECT TIME
E9 DETECTION METHOD

7. INV PUMP RATIO
MIN RATIO
MAX RATIO

8. CHECK PARTS

3.2 Project Menu

MENU > **Project Menu**

Project Menu allows installers to input the system configuration and set the system parameters. Enter the password, using ◄ ► to navigate between digits and using ▼ ▲ to adjust the numerical values, and then press **OK**. The password is 9877.

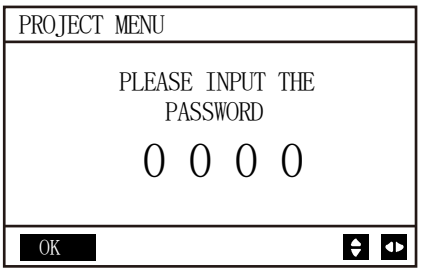

The following pages will be displayed after putting the password.

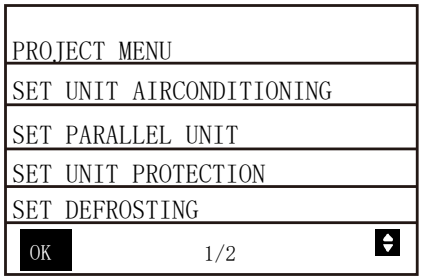

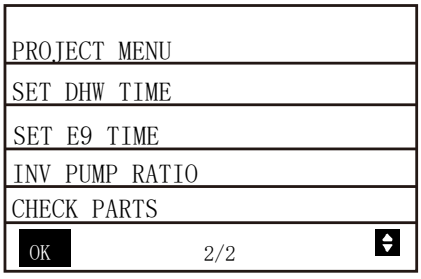

3.3 SET UNIT-AIRCONDITIONING

MENU > **Project Menu** > **SET UNIT-AIRCONDITIONING**

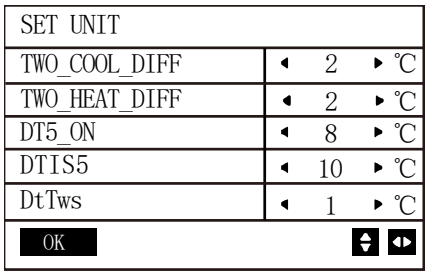

TWO_COOL_DIFF sets the minimum temperature difference between the leaving water temperature (Two) and the leaving water set temperature (TwoS) above which the unit will start for cooling mode. When Two - TwoS ≥ TWO_COOL_DIFF, unit starts. When TwoS - Two ≥ 2 lasts for 5s, unit stops.

TWO_HEAT_DIFF sets the minimum temperature difference between the leaving water temperature (Two) and the leaving water set temperature (TwoS) above which the unit will start for heating mode. When TwoS – Two ≥ TWO_HEAT_DIFF, unit starts. When Two - TwoS ≥ 2 lasts for 5s, unit stops.

If unit is customized with the DHW function, when TempW_heat_Min_n≤T5<Min(T5S, TempW_heat_Max_n)-dT5_ON and Two<Min(T5S, TempW_heat_Max_n)-2, then DHW mode is on.

Note:

The value of TempW_heat_Min_n, T5S, TempW_heat_Max_n are related to the ambient temperature, which are already fixed in the program.

T5 means the water tank temperature

T5S means the setting temperature of DHW mode

The target leaving water temperature of DHW mode is Twos=T5S+DT1S5. If Two>TempW_heat_Max_n, then DHW mode is off.

DtTws is reserved.

3.4 SET PARALLEL UNIT

MENU > Project Menu > SET PARALLEL UNIT

SET PAPALLEL UNIT	
TIM_CAP_ADJ	◂ 180 ▸ S
TW_COOL_DIFF	◂ 2 ▸ ℃
TW_HEAT_DIFF	◂ 2 ▸ ℃
RATIO_COOL_FIRST	◂ 0 ▸ %
RATIO_HEAT_FIRST	◂ 50 ▸ %
OK	

TIM_CAP_ADJ sets the period of capacity adjustment

TW_COOL_DIFF sets the minimum temperature difference between the total leaving water temperature (Tw) and the total leaving water set temperature (TwS) above which the unit will start for cooling mode. When Tw - TwS ≥ TW_COOL_DIFF + 1, unit starts. When TwoS - Tw ≥ 2 lasts for 5s, unit stops.

TW_HEAT_DIFF sets the minimum temperature difference between the total leaving water temperature (Tw) and the total leaving water set temperature (TwS) above which the unit will start for heating mode. When TwS – Tw ≥ TW_HEAT_DIFF + 1, unit starts. When Tw - TwS ≥ 1 lasts for 5s, unit stops.

RATIO_COOL_FIRST sets the number of initial startup units for cooling mode.

RATIO_HEAT_FIRST sets the number of initial startup units for heating mode.

3.5 SET UNIT PROTECTION

MENU > Project Menu > SET UNIT PROTECTION

SET UNIT PROTECTION	
T_DIFF_PRO	◂ 12 ▸ ℃
TWI_O ABNORMAL	◂ 2 ▸ ℃
OK	

T_DIFF_PRO set the absolute difference between entering water temperature (Twi) and leaving water temperature (Two). If |Twi - Two| ≥ T_DIFF_PRO, unit stops and error code P9 appears. Normal heat pumps when |Twi-Two| ≥10℃ [T_DIFF_PRO], or high temperature heat pumps |Twi-Two| ≥15℃, error code disappears.

TWI_O_ABNORMAL sets the difference between entering water temperature (Twi) and leaving water temperature (Two). For cooling mode, if Two – Twi ≥ TWI_O_ABNORMAL and lasts for 20min, unit stops and error code PA appears. If Two – Twi ≤ TWI_O_ABNORMAL – 1, error code disappears. For heating mode, if Twi – Two ≤ TWI_O_ABNORMAL and lasts for 20min, unit stops and error code PA appears. If Two – Twi > 1 - TWI_O_ABNORMAL, error code disappears.

3.6 SET DEFROSTING

MENU > **Project Menu** > **SET DEFROSTING**

SET DEFROSTING	
T_FROST	◂ 35 ▸ min
T_DEFROST_IN	◂ 0 ▸ ℃
T_FROST_OUT	◂ 0 ▸ ℃
OK	

T_FROST sets the time between the end of the last defrost mode and the beginning of the next defrost mode.

T_DEFROST_IN sets the temperature for T3 of entering defrosting mode. When T3 reaches T_DEFROST_IN, unit enters defrosting mode.

T_FROST_OUT sets the temperature for T3 of exiting defrosting model. When T3 reaches T_DEFROST_IN, unit exits defrosting mode.

3.7 DHW time setting（Customized）

MENU > **Project Menu** > **SET DHW TIME**

SET DHW TIME	
SELECT ADDRESS	◂ 07 ▸ #
COOL MAX TIME	◂ 08 ▸ h
COOL MIN TIME	◂ 0.5 ▸ h
HEAT MAX TIME	◂ 08 ▸ h
HEAT MIN TIME	◂ 0.5 ▸ h
OK	1/2

SET DHW TIME	
DHW MIN TIME	◂ 0.5 ▸ h
DHW MAX TIME	◂ 08 ▸ h
OK	2/2

COOL MAX TIME sets the maximum operation time for cooling mode when DHW requirement exists.

COOL MIN TIME sets the minimum operation time for cooling mode when DHW requirement exists.

HEAT MAX TIME sets the maximum operation time for heating mode when DHW requirement exists.

HEAT MIN TIME sets the minimum operation time for heating mode when DHW requirement exists.

DHW MIN TIME sets the minimum operation time for DHW mode.

DHW MAX TIME sets the maximum operation time for DHW mode.

3.8 SET E9 TIME

MENU > **Project Menu** > **SET E9 TIME**

SET E9 TIME	
E9 PROTECT TIME	◂ 10 ▸ S
E9 DETECTION METHOD	◂ 1 ▸ #
OK	

E9 PROTECT TIME sets the delay time of water flow detection. When unit starts, water flow will not be detected until at least (2+ **E9 PROTECT TIME/60**) minutes have elapsed.

E9 DETECTION METHOD sets the method of water flow detection. If “1” is selected, the water flow switch is detected after water pump starts. If “2” is selected, the water flow switch is both detected before and after the water pump starts.

3.9 INV PUMP RATIO

MENU > Project Menu > INV PUMP RATIO

INV PUMP RATIO	
MIN RATIO	◂ 70 ▸ %
MAX RATIO	◂ 100 ▸ %
OK	

MIN RATIO sets the minimum output ratio of inverter pump which is installed in the main water pipe.

MAX RATIO sets the maximum output ratio of inverter pump which is installed in the main water pipe.

3.10 CHECK PARTS

MENU > Project Menu > CHECK PARTS

State of different parts can be checked in this menu.

CHECK PARTS	
SELECT ADDRESS	◂ 07 ▸ #
FIX PUMP STATE	OFF
INV PUMP STATE	80%
FOUR-WAY VALVE	OFF
SV1 STATE	OFF
BACK	1/3

CHECK PARTS	
SV2 STATE	OFF
SV4 STATE	OFF
SV5 STATE	OFF
SV6 STATE	OFF
SV8A STATE	OFF
BACK	2/3

CHECK PARTS	
SV8B STATE	OFF
HEAT1 STATE	OFF
HEAT2 STATE	OFF
COIL VALVE	OFF
BACK	3/3

4 Parameters setting

Menu	Parameters	Setting range	Default value	Adjustment range
Service menu	TEMP_AUXHEAT_ON	0~10℃	5℃	1℃
	TW_HEAT1_ON	0~50℃	25℃	1℃
	TW_HEAT1_OFF	0~60℃	45℃	1℃
	T_HEAT2_DELAY	60~240min	90min	5min
	DT5_HEAT2_OFF	2~10℃	5℃	1℃
	T4_HEAT2_ON	-5~20℃	5℃	1℃
	T4_COOL_1	15~30℃	25℃	1℃
	T4_COOL_2	35~45℃	40℃	1℃
	OFFSET_C	0~15℃	10℃	1℃
	T4_HEAT_1	-10~10℃	2℃	1℃
	T4_ HEAT _2	15~30℃	15℃	1℃
	OFFSET_H	0~30℃	10℃	1℃
	RATIO_PUMP	30%~100%	100%	5%
	PUMP ON TIME	5~60min	5min	5min
	PUMP OFF TIME	0~60min	0min	5min
	MIN TEMP FOR COOL	0~20℃	7℃	1℃
	ENERGY SAVING SWITCH	40~100%	100%	10%

Menu	Parameters	Setting range	Default value	Adjustment range
Project menu	TWO_COOL_DIFF	1℃~5℃	2℃	1℃
	TWO_HEAT_DIFF	1℃~5℃	2℃	1℃
	TIM_CAP_ADJ	60~360s	80s	20s
	TW_COOL_DIFF	1℃~5℃	2℃	1℃
	TW_HEAT_DIFF	1℃~5℃	2℃	1℃
	RATIO_COOL_FIRST	0~100%	50%	5%
	RATIO_HEAT_FIRST	0~100%	50%	5%
	T_DIFF_PRO	Normal：8~15℃	Normal ：10℃	1℃
		Hot：8~20℃	Hot：15℃	
	TWI_O_ABNORMAL	1~5℃	2℃	1℃
	T_FROST	20~120 min	35 min	5min
	T_DEFROST_IN	-5~5℃	0℃	1℃
	T_FROST_OUT	-10~+10℃	0℃	1℃
	E9 PROTECT TIME	2~20s	5s	1
	E9 DETECTION METHOD	1~2	1	1
	MIN RATIO	Normal：40~100%	75%	5%
		Hot：25~100%	25%	5%
	MAX RATIO	70~100%	100%	5%
Project menu (customized with DHW)	dT5_ON	2~10℃	8℃	1℃
	dT1S5	5~20℃	10℃	1℃
	COOL MIN TIME	0.5~24h	0.5h	0.5h
	COOL MAX TIME	0.5~24h	8h	0.5h
	HEAT MIN TIME	0.5~24h	0.5h	0.5h
	HEAT MAX TIME	0.5~24h	8h	0.5h
	DHW MIN TIME	0.5~24h	0.5h	0.5h
	DHW MAX TIME	0.5~24h	8h	8h

KAISAI

P/N: 2022-12V1

kaisai.com